636904

REPORT NO. 208-MGA-2003-009

SAFETY COMPLIANCE SLED TESTING FOR FMVSS 208 OCCUPANT CRASH PROTECTION

Toyota Motors Corporation
2002 Toyota Avalon 4 Door
NHTSA NO. C25111

MGA RESEARCH CORPORATION
5000 WARREN ROAD
BURLINGTON, WI 53105

Test Date: September 17, 2003

Report Date: October 6, 2003

FINAL REPORT

Prepared For:
U.S. DEPARTMENT OF TRANSPORTATION
NATIONAL HIGHWAY TRAFFIC SAFETY ADMINISTRATION
OFFICE OF ENFORCEMENT
OFFICE OF VEHICLE SAFETY COMPLIANCE
MAIL CODE: NSA-220
400 SEVENTH STREET, S.W., ROOM 6115
WASHINGTON, D.C. 20590

This publication is distributed by the U.S. Department of Transportation, National Highway Traffic Safety Administration, in the interest of information exchange. The opinions, findings and conclusions expressed in this publication are those of the author(s) and not necessarily those of the Department of Transportation or the National Highway Traffic Safety Administration. The United States Government assumes no liability for its contents or use thereof. If trade or manufacturers' names or products are mentioned, it is only because they are considered essential to the object of the publication and should not be construed as an endorsement. The United States Government does not endorse products or manufacturers.

PREPARED BY: _____ DATE: 10-6-03
Chad Gadberry, Project Engineer
MGA Research Corporation

APPROVED BY: _____ DATE: 10-6-03
David Winkelbauer, Facility Director
MGA Research Corporation

Technicians:
Randy Boals
Tammy Brausch
James Carney
Rick Dodge
Jessica Gall
Jordan Haynes
Tim Michnay
Chris Novak
David Wilcox

Secretary: Pam Delaney

FINAL REPORT ACCEPTED BY:

_____
Contracting Officer's Technical Representative (COTR)
NHTSA, Office of Vehicle Safety Compliance

11/3/03
Date of Report Acceptance

TECHNICAL REPORT STANDARD TITLE PAGE

1. Report No. 208-MGA-2003-009	2. Government Accession No.	3. Recipient's Catalog No.
4. Title and Subtitle Final Report for FMVSS 208 Compliance Sled Testing of a 2002 Toyota Avalon 4 Door NHTSA No. C25111		5. Report Date September 29, 2003 6. Performing Organization Code MGA
7. Author(s) Chad Gadberry		8. Performing Organization Report No. MGA-DOT-208-009
9. Performing Organization Name and Address MGA Research Corporation 5000 Warren Road Burlington, WI 53105		10. Work Unit No. 11. Contract or Grant No.
12. Sponsoring Agency Name and Address Toyota Motor North America, Inc. in cooperation with U.S. Department of Transportation National Highway Traffic Safety Administration Office of Vehicle Safety Compliance (Mail Code: NSA-220) 400 Seventh St., S.W., Room 6115 Washington, D.C. 20590		13. Type of Report and Period Covered Final Report 14. Sponsoring Agency Code NSA-30
15. Supplementary Notes		

16. Abstract

A compliance test (sled test) was conducted on the subject 2002 Toyota Avalon 4 Door in accordance with the specifications of the Office of Vehicle Safety Compliance Test Procedure No. TP208S-01 for the determination of FMVSS 208 compliance. Test failures identified were as follows:

None noted

17. Key Words Compliance Testing Safety Engineering FMVSS 208S Sled Test		18. Distribution Statement Copies of this report are available from: NHTSA Technical Reference Division, Room 5108, (NPO-230) 400 Seventh Street, S.W. Washington, D.C. 20590 Telephone No. (202) 366-4946	
19. Security Classif. (of this report) Unclassified	20. Security Classif. (of this page) Unclassified	21. No. of Pages 167	22. Price

Form DOT F 1700.7 (8-69)

TABLE OF CONTENTS

DESCRIPTION	PAGE NO.
Purpose	1
Test Procedure	2
Test Results Summary	3
Sled Test Summary	5
General Test and Vehicle Parameter Data	6
Post Test Data	9
Seat and Steering Column Positioning Data	10
Dummy Positioning Measurement Table	11
Vehicle Targeting Measurements	16
Vehicle Accelerometer Placement and Data Summary	17
Vehicle Accelerometer Location Measurements and Data Summary	18
Camera Positions	19
Camera Location Measurements	20
Occupant Injury Data	21
Seat Belt Warning System Data	23
Readiness Indicator	24
Airbag Labels Data	25
Rear Outboard Seating Position Seat Belt Data	32
Lap Belt Lockability Data	33
Seat Belt Comfort and Convenience Data	45

Appendix A - Photographs

Appendix B - Data Plots

Appendix C - Manufacturer Provided Test Information

Purpose

This FMVSS 208 compliance sled test is part of the Federal Motor Vehicle Safety Standard (FMVSS) 208 compliance test program conducted for Toyota Motor North America, Inc. in cooperation with the National Highway Traffic Safety Administration (NHTSA) by MGA Research Corporation (MGA). The purpose of this test was to determine if the subject vehicle, a 2002 Toyota Avalon 4 Door, NHTSA No. C25111, meets the performance requirements of FMVSS 208, "Occupant Crash Protection," in the impact simulation sled test mode.

Test Procedure

This test was conducted in accordance with NHTSA's Office of Vehicle Safety Compliance (OVSC) Laboratory Test Procedure No. TP-208S-01 dated January 15, 1998. Data was obtained relative to FMVSS 208, "Occupant Crash Protection," performance.

The test vehicle was instrumented with four (4) accelerometers to measure longitudinal axis accelerations.

The test vehicle contained two (2) Part 572 E 50th percentile adult male anthropomorphic test devices (dummies). The dummies were positioned in the front outboard seating positions according to the dummy placement procedures specified in Appendix B of the Laboratory Test Procedure. The dummies were not restrained by seat belts.

Both dummies were instrumented with head and chest accelerometers to measure longitudinal, lateral, and vertical accelerations; chest deflection potentiometers; left and right femur load cells to measure axial forces; and upper neck load cells to measure longitudinal, lateral, and vertical forces and moments.

The thirty-seven (37) data channels were digitally sampled at 10,000 samples per second and processed per Sections 11.7 through 11.9 of the Laboratory Test Procedure.

The crash event was recorded by six (6) high-speed motion picture cameras. The pre-test and post-test conditions were recorded by one (1) real-time motion picture camera.

Test Results Summary

This FMVSS 208 compliance sled test was conducted at MGA Research Corporation on September 17, 2003.

The test vehicle, a 2002 Toyota Avalon 4 Door, NHTSA No. C25111, appeared to comply with all of the performance requirements of FMVSS 208 in the impact simulation sled test mode as measured by Hybrid III 50th percentile male dummies.

	FMVSS 208 Max. Allowable Injury Assessment Values	Driver (Serial #312)	Passenger (Serial #340)
HIC	1000	174	168
Chest g	60 g	29.2 g	39.1 g
Chest displacement	3 in.	1.3 in.	0.3 in.
Left Femur	2250 lb	1393 lb	1023 lb
Right Femur	2250 lb	1322 lb	947 lb
Neck Extension	57 Nm	22.9 Nm	12.6 Nm
Neck Flexion	190 Nm	28.7 Nm	64.4 Nm
Neck Tension	3300 N	1333 N	362 N
Neck Compression	4000 N	529 N	551 N
Neck Shear	3100 N	447 N	1441 N

The vehicle appears to meet the other FMVSS 208 requirements for which it was tested. These results are shown in the data sheets that are included in this report.

The test vehicle was equipped with air bags at the driver and passenger seating positions. The dummies were not restrained by seat belts. The sled carriage was accelerated to 18.0 g with an integrated velocity change of 30.2 mph. After filtering the acceleration signal to Channel Class 60, the airbag system was triggered 22.0 milliseconds after 0.5 g acceleration.

Test Anomalies:

The airbag warning label on the dash was removed prior to receiving the vehicle. It is not known whether the label was removed by the dealer, by a potential customer, or not installed at all.

Sled Test Summary

Vehicle NHTSA No.: C25111 Test Mode: FMVSS 208 SLED TEST

Vehicle Yr/Make/Model/Body Style: 2002/Toyota/Avalon/4 Door

Test Date: September 17, 2003 Time: 11:00 p.m. Temp: 70°F

Vehicle Test Weight: 3896 lbs.

DUMMY INFO.	DRIVER	PASSENGER
Dummy Type	Part 572E	Part 572E
Serial Number	312	340
Restraint System	Frontal airbag	Frontal airbag
No. Data Channels	15	15

Number of Cameras: 1 Real Time
6 High Speed

Door Opening Data: yes Left Front
yes Right Front

FRONT SEAT(S) DATA	DRIVER	PASSENGER
Seat Track Failure -	0.0 inches shift;	0.0 inches shift
Seat Back Failure -	no	no

VISIBLE DUMMY CONTACT POINTS:	DRIVER	PASSENGER
Head	Airbag/windshield/ sunvisor/header	Airbag/sunvisor
Chest	Airbag	Airbag
Left Knee	Knee bolster	Glove box
Right Knee	Knee bolster	Glove box

General Test And Vehicle Parameter Data

Vehicle Yr/Make/Model/Body Style: 2002/Toyota/Avalon/4 Door

Vehicle NHTSA No.: C25111 VIN: 4T1BF28B02U242979 Color: Black

Engine Data:

No. Cylinders: 6 ; CID:____; Liters: 3.0 ; CCs:____

Placement: Longitudinal/Inline:____; Transverse/Lateral: X

Transmission Data:

Speeds: 4 ; Manual:____; Automatic: X ; Overdrive: X

Final Drive:

Rear Wheel Drive:____; Front Wheel Drive: X ; Four Wheel Drive:____

Major Options:

A/C: X ; Pwr. Strg.: X ; Pwr. Brakes: X ; Pwr. Windows: X

Pwr. Dr. Locks: X ; Other: Power seats, tilt wheel, cruise control, rear defogger

Date Received: 9/4/2002 ; Odometer Reading: 54 miles

Selling Dealer: Wilde Toyota, Inc. 3225 S. 108th Street, West Allis, WI 53227

REMARKS: None

General Test And Vehicle Parameter Data (Cont.)

DATA FROM VEHICLE'S CERTIFICATION LABEL:

Vehicle Manufactured By: Toyota Motors Corporation

Date of Manufacture: 2/02 ; VIN: 4T1BF28B02U242979

GVWR: 4550 lbs; GAWR Front: 2665 lbs.

GAWR Rear: 2665 lbs.

DATA FROM TIRE PLACARD:

Tire Pressure with Maximum Capacity Vehicle Load:

FRONT: 31 psi REAR: 31 psi

Recommended Tire Size: P205/65R15 92H or P205/60R16 91H ;

Recommended Cold Tire Pressure:

FRONT: 31 psi REAR: 31 psi

Size of Tires on Test Vehicle: P205/65R15 92H

Type of Spare Tire: P205/65R15 92H ; Space Saver:____; Standard: X

Vehicle Capacity Data:

Type of Front Seats: X Bucket; __Bench; __Split Bench

Number of Occupants: 2 Front; 3 Rear; __3rd Seat; 5 TOTAL

REMARKS: None

VEHICLE CAPACITY WEIGHT (VCW) = 902 lbs.

No. Of Occupants x 150 lbs = 750 lbs.

Rated Cargo/Luggage Weight (RCWL) = 152 lbs. (Difference)

General Test And Vehicle Parameter Data (Cont.)

WEIGHT OF TEST VEHICLE AS RECEIVED AT LABORATORY: (with maximum fluids)

Right Front =	1037 lbs.	Right Rear =	653 lbs.
Left Front =	1036 lbs.	Left Rear =	674 lbs.
TOTAL FRONT =	2073 lbs.	TOTAL REAR =	1327 lbs.
% Total Weight =	61.0 %	% Total Weight =	39.0 %

TOTAL DELIVERED WEIGHT = 3400 lbs.

WEIGHT OF FULLY LOADED TEST VEHICLE WITH TWO DUMMIES (344 LB) AND 152 POUNDS OF CARGO WEIGHT:

Right Front =	1112 lbs.	Right Rear =	826 lbs.
Left Front =	1114 lbs.	Left Rear =	844 lbs.
TOTAL FRONT =	2226 lbs.	TOTAL REAR =	1670 lbs.
% Total Weight =	57.1 %	% Total Weight =	42.9 %

TOTAL WEIGHT = 3896 lbs.

TEST VEHICLE ATTITUDE: (all measurements in degrees)

AS DELIVERED DOOR SILL ANGLE:	1.1° nose down
AS TESTED DOOR SILL ANGLE:	0.8° nose down
FULLY LOADED DOOR SILL ANGLE:	0.7° nose down

FUEL SYSTEM DATA:

Fuel System Capacity From Owner's Manual = 18.5 gallons

Usable Capacity Figure Furnished by COTR = 18.5 gallons

REMARKS: None

Post-Impact Data

Test number:	HT03091701
NHTSA number:	C25111
Test date:	September 17, 2003
Test time:	11:00 p.m.
Test type:	FMVSS 208 Compliance Sled Test
Impact angle:	0°
Ambient Temperature at Impact Area:	70°F
Temperature in Occupant Compartment:	70°F

Impact Velocity:

Integrated velocity from the integration of the entire sled acceleration:	30.2 mph
Specified integrated velocity range:	28 to 30 mph

Sled Carriage Acceleration:

Acceleration:	18.0 g
Specified Acceleration Range:	16.0 - 18.2 g

Sled Carriage Acceleration Duration:

Time from T-0 (-0.5 g) to 0.0 g:	121.9 msec
Specified Acceleration Duration:	120.0 to 130.0 msec

The sled acceleration corridor was achieved.

Seat and Steering Column Positioning Data

Vehicle Yr/Make/Model/Body Style: 2002/Toyota/Avalon/4 Door

Vehicle NHTSA No.: C25111 Test Date: September 17, 2003

NOMINAL DESIGN RIDING POSITION:

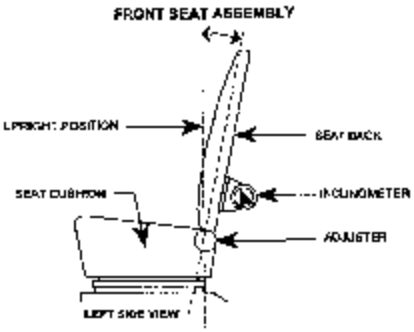

Driver Seat: Seat Back Angle = 8.8°*

Passenger Seat: Seat Back Angle = 8.9°*

* - Measured at headrest post. Corresponds to seatback being set 6° from fully upright.

SEAT FORE AND AFT POSITIONS:

Driver Seat: The seat track had a total movement of 225 mm and was positioned 113 mm rearward from the foremost position.

Passenger Seat: The seat track had a total position movement of 225 mm and was positioned 113 mm rearward from the foremost position.

STEERING COLUMN ADJUSTMENTS:

The steering column was placed in the mid position (3rd position of 5).

Dummy Positioning Measurement Table

Vehicle Year/Make/Model/Body Style: 2002/Toyota/Avalon/4 Door

Vehicle NHTSA No.: C25111 Test Date: September 17, 2003

	DRIVER (Serial #312)	PASSENGER (Serial #340)
WA°	29.5°	
SWA°	62.2°	
SCA°	27.2°	
SA°*	8.8°	8.9°
HZ	8.1	7.6
HH	15.0	14.3
HW	25.0	24.8
HR	9.4	9.6
NR	17.9 Angle (NA°) 10.5°	
CD	27.7	22.5
CS	13.9	
RA	8.3	
KDL	6.6 Angle (KDA°) 22.5°	6.7
KDR	6.5	7.0 Angle (KDA°) 23.7°
PA°	23.5°	22.5°
TA°	39.7°	39.8°
KK	13.2	10.6
ST	17.8 Angle 6.8°	18.5 Angle 10.7°
SK	23.2 Angle 101.1°	23.8 Angle 98.7°
SH	10.6 Angle 135.2°	10.0 Angle 138.7°
SHY	11.0	11.1
HS	13.3	13.5
HD	7.0	6.4
AD	4.8	5.4

* - Measured at headrest post

DUMMY MEASUREMENT FOR FRONT SEAT PASSENGERS

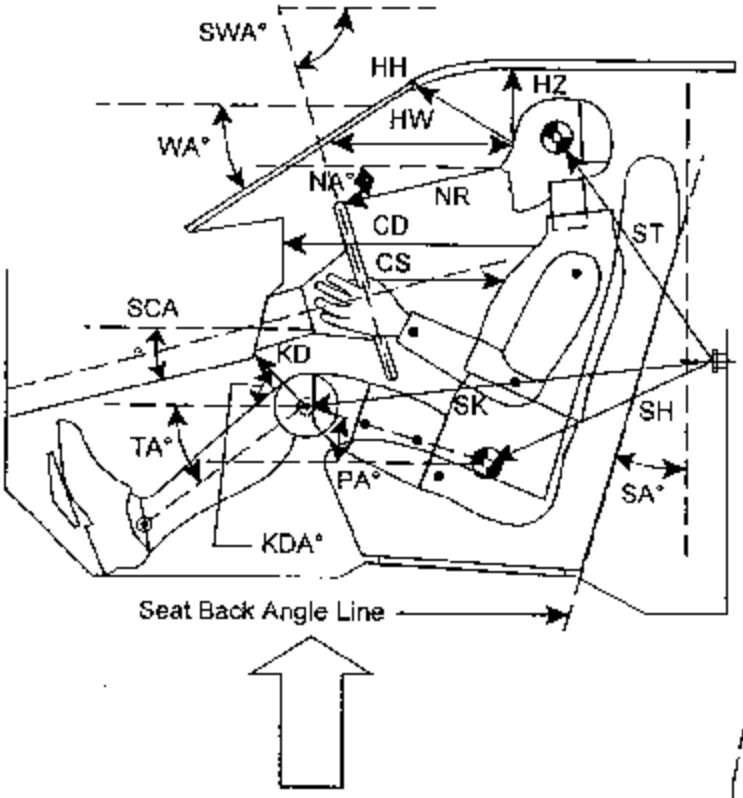

AD - Arm to Door
HD - H-Point to Door
HR - Head to Side Header
HS - Head to Side Window
KK - Knee to Knee
SHY- Striker to H-Point (Y Direction)

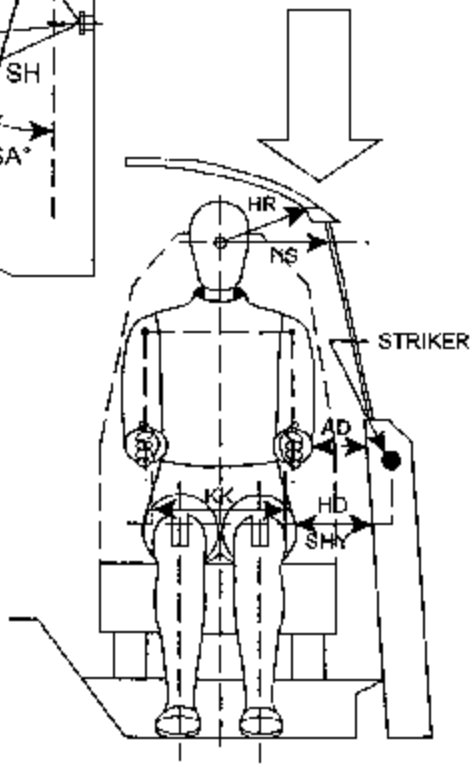

CD - Chest to Dash
CS - Steering Wheel to Chest
HH - Head to Header
HW - Head to Windshield
HZ - Head to Roof
KDA- Knee to Dash Angle
KDL- Left Knee to Dash
KDR- Right Knee to Dash
NA - Nose to Rim Angle
NR - Nose to Rim
PA - Pelvic Angle
RA - Rim to Abdomen
SA - Seat Back Angle
SCA- Steering Column Angle
SH - Striker to H-Point
SK - Striker to Knee
ST - Striker to Head
SWA- Steering Wheel Angle
TA - Tibial Angle
WA - Windshield Angle

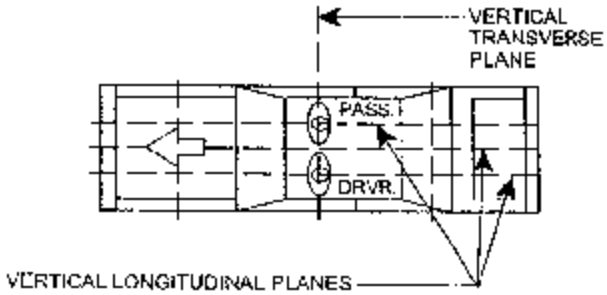

Description of Dummy Measurements

When a level is to be used, it is to ensure that the line containing the two points described is either parallel or perpendicular to the ground. If a measurement to be made is less than 10 inches ignore the directions to use a level and approximate a level measurement. Also, when a measurement is to be taken to or from the center of a bolt on the dummy, take the measurement from the center of the bolt hole if the bolt is recessed.

The following measurements are to be made within a vertical longitudinal plane.

* HH Head to Header, taken from the point where the dummy's nose meets his forehead (between his eyes) to the furthest point forward on the header.

* HW Head to Windshield, taken from the point where the dummy's nose meets his forehead (between his eyes) to a point on the windshield. Use a level.

HZ Head to Roof, taken from the point where the dummy's nose meets his forehead (between his eyes) to the point on the roof directly above it. Use a level.

* CS Steering Wheel to Chest, taken from the center of the steering wheel hub to the dummy's chest. Use a level.

* CD Chest to Dash, place a tape measure on the tip of the dummy's chin and rotate five inches of it downward toward the dummy to the point of contact on the transverse center of the dummy's chest. Then measure from this point to the closest point on the dashboard either between the upper part of the steering wheel between the hub and the rim, or measure to the dashboard placing the tape measure above the rim, whichever is a shorter measurement. See photograph.

RA Steering Wheel Rim to Abdomen, taken from the bottommost point of the steering wheel rim horizontally rearward to the dummy. Use a level.

NR Nose to Rim, taken from the tip of the dummy's nose to the closest point on the top of the steering wheel rim. Also indicate the angle this line makes with respect to the horizontal (NA).

*[1] KDL, KDR Left and Right Knees to Dashboard, taken from the center of the knee pivot bolt's outer surface to the closest point forward acquired by swinging the tape measure in continually larger arcs until it contacts the dashboard. Also reference the angle of this measurement with respect to the horizontal for the outboard knee (KDA). See photograph.

* Measurement used in Data Tape Reference Guide
[1] Only outboard measurement is referenced in Data Tape Reference Guide

SH, SK, ST Striker to Hip, Knee, and Head, these measurements are to be taken in the X-Z plane measured from the forward most center point on the striker to the center of the H-point, outer knee bolt, and head target. When taking this measurement a firm device that can be rigidly connected to the striker should be used. Use a level. The angles of these measurements with respect to the horizontal should also be recorded. The measurement in the Y (transverse) direction from the striker to the H-point should also be taken (SHY). See photograph.

The following measurements are to be made within a vertical transverse plane.

HS Head to Side Window, taken from the point where the dummy's nose meets his forehead (between his eyes) to the outside of the side window. In order to make this measurement, roll the window down to the exact height which allows a level measurement. Use a level. See photograph.

* AD Arm to Door, taken from the outer surface of the elbow pivot bolt on a Hybrid II dummy to the first point it hits on the door. In the case of a Hybrid III dummy, measure from the bolt on the outer biceps. When a SID is used make the measurement from the center of the bottom of the arm segment where it meets the dummy's torso.

* HD H-point to Door, taken from the H-point on the dummy to the closest point on the door. Use a level.

* HR Head to Side Header, measure the shortest distance from the point where the dummy's nose meets his forehead (between his eyes) to the side edge of the header just above the window frame, directly adjacent to the dummy.

SHY Striker to H-point, taken from a rod rigidly connected to the forward most center point on the striker to the H-point. Use a level. See photograph.

KK Knee to Knee, for Hybrid II dummies measure the distance between knee pivot bolt head outer surfaces. For Hybrid III dummies measure the distance between the outboard knee clevis flange surfaces. (This measurement may not be exactly transverse)

* Measurement used in Data Tape Reference Guide

Angles

SA	Seat Back Angle, find this angle using the instructions provided by the manufacturer. If the manufacturer doesn't provide clear instructions contact the COTR.
PA	Pelvic or Femur Angle, taken by inserting the pelvic angle gauge into the H-point gauging hole on the SID or the Hybrid III dummies and taking this angle with respect to the horizontal. Measure the angle of the line connecting the H-point hole and the outer knee pivot bolt hole on a Hybrid II dummy with respect to the horizontal, to find the femur angle.
SWA	Steering Wheel Angle, find this by placing a straight edge against the steering wheel rim along the longitudinal plane. Then measure the acute angle of the straight edge with respect to the horizontal.
SCA	Steering Column Angle, measured with respect to the horizontal by placing an inclinometer on the center of the underside of the steering column.
NA	Measure the angle made when taking the measurement NR with respect to the horizontal.
KDA	Knee to Dash Angle, the angle that the measurement KD is taken at with respect to the horizontal. Only get this angle for the outboard knee. See photograph.
WA	Windshield Angle, place an inclinometer along the transverse center of the windshield exterior (measurement is made with respect to horizontal).
TA	Tibial Angle, use a straight edge to connect the dummy's knee and ankle bolts. Then place an inclinometer on the straight edge and measure the angle with respect to the horizontal.

REFERENCE PHOTO TARGETS

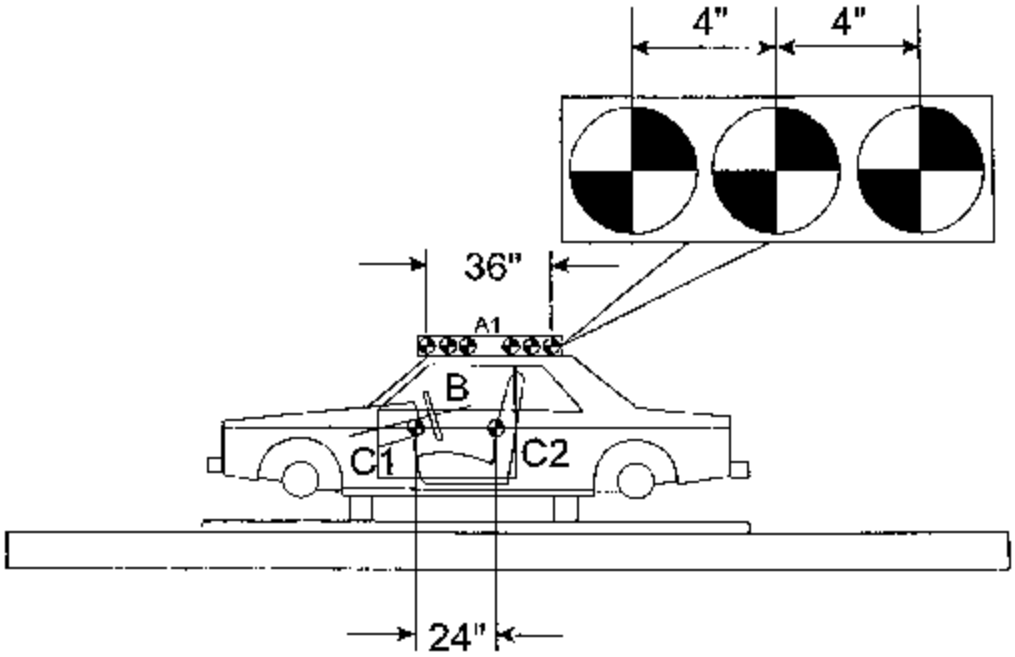

LEFT SIDE VIEW

Vehicle Accelerometer Placement and Data Summary

Vehicle Year/Make/Model/Body Style: 2002/Toyota/Avalon/4 Door

Vehicle NHTSA No.: C25111 Test Date: September 17, 2003

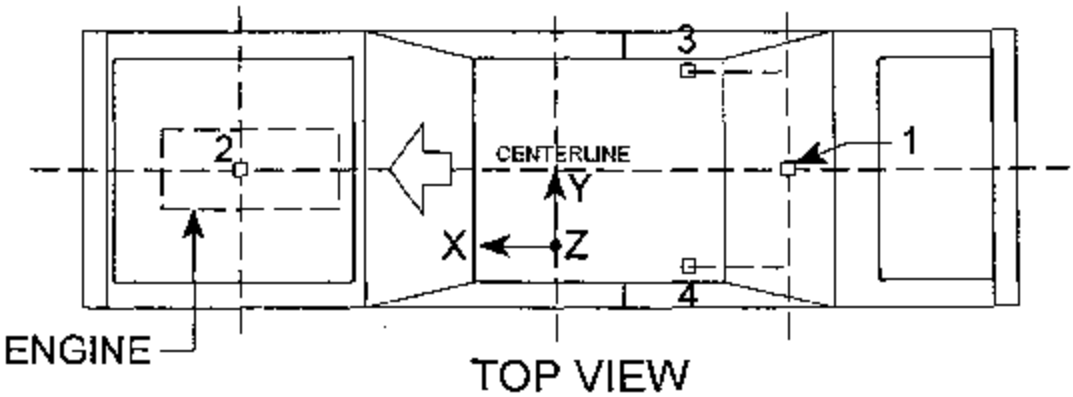

TOP VIEW

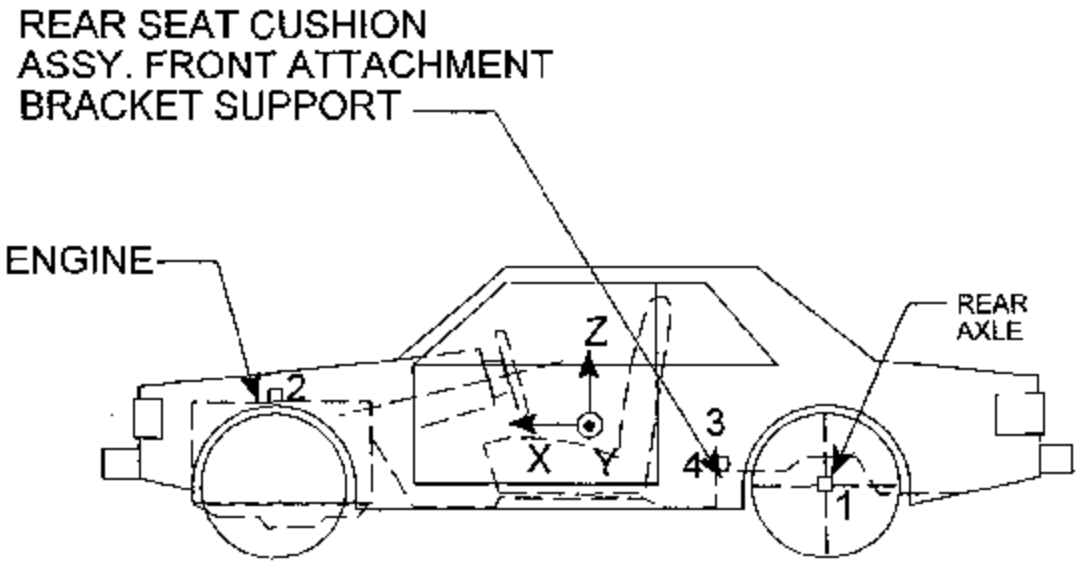

LEFT SIDE VIEW

Vehicle Accelerometer Location Measurements and Data Summary

Vehicle Year/Make/Model/Body Style: 2002/Toyota/Avalon/4 Door

Vehicle NHTSA No.: C25111 Test Date: September 17, 2003

No.	Location	X (in)	Y (in)	Positive Direction		Negative Direction	
				Value	Time (msec)	Value	Time (msec)
	Sled Primary Longitudinal	67.0	0	18.0 g	69	-1.1 g	125
	Sled Redundant Longitudinal	67.0	4.0	18.0 g	69	-1.0 g	125
	Sled Velocity Measured Integrated	67.0	0	30.2 mph	122	--	--
1	Rear Axle Longitudinal	49.0	0	16.1 g	70	-1.9 g	170
2	Top Engine Longitudinal	163.0	0	18.2 g	61	-1.5 g	127
3	Right Rear Seat Member Longitudinal	77.0	13.3	18.7 g	50	-1.0 g	126
4	Left Rear Seat Member Longitudinal	77.0	13.3	18.3 g	50	-1.0 g	126

Camera Positions

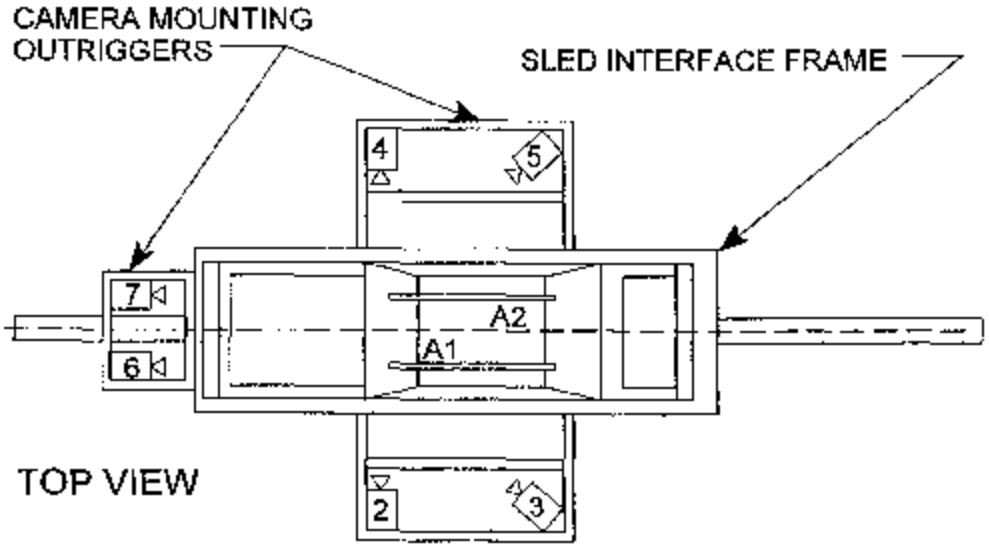

TOP VIEW

CAMERA FRAME RATES:
#1 = 24 fps
All Others = 1,000 fps

1 REAL TIME CAMERA

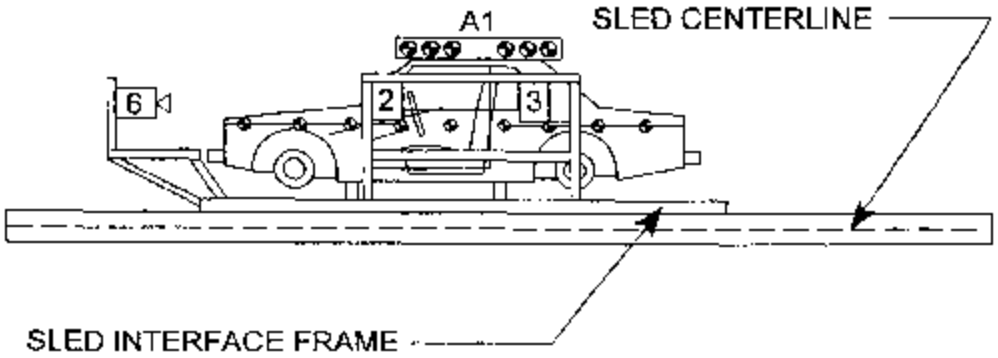

LEFT SIDE VIEW

Camera Location Measurements

Camera No.	VIEW	Camera Positions (inches)*			Angle (deg)	Film Plane To Head Target	Lens (mm)	Speed (fps)
		X	Y	Z				
1	Real-Time (Pre and Post)						10	24
2	Onboard Driver	70.6	88.6	38.4	90	72.4	13	1000
3	Onboard Driver Angle	150.9	91.1	47.8			13	1000
4	Onboard Passenger	71.8	89.6	38.5	90	71.1	13	1000
5	Onboard Passenger Angle	146.7	88.5	47.9			13	1000
6	Onboard Windshield Driver	18.3	14.1	42.9			13	837
7	Onboard Windshield Passenger	18.3	13.9	42.9			13	719

Reference* X = Front of sled carriage

Y = Center of sled carriage

Z = Top of sled carriage

Occupant Injury Data

Vehicle Year/Make/Model/Body Style: 2002/Toyota/Avalon/4 Door

Vehicle NHTSA No.: C25111 Test Date: September 17, 2003

MAXIMUM ACCELERATION VALUES: (g's)	DRIVER DUMMY #312	PASSENGER DUMMY #340
Head Channel X	-47.7	-35.7
Head Channel Y	5.4	-37.6
Head Channel Z	-17.1	17.8
HEAD RESULTANT	49.9	38.6
Chest Channel X	-25.4	-35.0
Chest Channel Y	6.9	2.4
Chest Channel Z	-16.0	-18.7
CHEST RESULTANT	29.9	39.5

HEAD INJURY CRITERIA (HIC) VALUES:

HIC	174	168
t_1 = (msec)	86.4	91.6
t_2 = (msec)	115.9	126.1

[The maximum time interval from t_1 to t_2 is 36 milliseconds.]

CHEST INJURY CRITERIA (CLIP) VALUES: (g's)

CLIP	29.2	39.1
t_1 = (msec)	98.1	100.7
t_2 = (msec)	101.1	103.7
CHEST DEFLECTION (in)	1.3	0.3

Occupant Injury Data (Cont.)

MAX. COMPRESSIVE FEMUR FORCES:	DRIVER DUMMY #312	PASSENGER DUMMY #340
Left Side (lbs)	1393	1023
Right Side (lbs)	1322	947

NECK INJURY CRITERIA:

Peak Flexion Bending Moment about the Occipital Condyle (N-m)	28.7	64.4
Peak Extension Bending Moment about the Occipital Condyle (N-m)	22.9	12.6
Peak Axial Tension (N)	1333	362
Peak Axial Compression (N)	529	551
Peak Fore Shear (N)	447	1441
Peak Aft Shear (N)	151	237

Seat Belt Warning System Data

Vehicle Year/Make/Model/Body Style: 2002/Toyota/Avalon/4 Door

NHTSA No.: C25111 ; Technician: Chad Gadberry ; Date: December 10, 2002

Complete the following to determine which seat belt warning system option (S7.3(a)(1) or S7.3 (a)(2)) is used. (Manufacturers may use either option.)

A. With occupant in driver's position and lap belt in stowed position and ignition switch placed in "Start/On" position:

A.1 S7.3(a)(1)
Time duration of audible warning signal = 6 seconds
(4 to 8 seconds)

Time duration of reminder light operation = >60 seconds
(no less than 60 seconds)

A.2 S7.3(a)(2)
Time duration of audible warning signal = ____ seconds
(4 to 8 seconds)(see 49 USCS @ 30124)

Time duration of reminder light operation = ____ seconds
(4 to 8 seconds)

B. With occupant in driver's position and lap belt in use and ignition switch placed in "Start/On" position:

B.1 S7.3(a)(1)
Time duration of audible warning signal = 0 seconds
(audible warning not required)

Time duration of reminder light operation = 0 seconds
(reminder light not required)

B.2 S7.3(a)(2)
Time duration of audible warning signal = ____ seconds
(audible warning not required)

Time duration of reminder light operation = ____ seconds
(4 to 8 seconds)

C. Note wording of visual warning:
Fasten seat belt _____
Fasten Belt _____
Symbol 101 X

Readiness Indicator

Vehicle Year/Make/Model/Body Style: 2002/Toyota/Avalon/4 Door

NHTSA No.: C25111 ; Technician: Chad Gadberry ; Date: December 10, 2002

An occupant restraint system that deploys in the event of a crash shall have a monitoring system with a readiness indicator. A totally mechanical system is exempt from this requirement. (11/8/94 legal interpretation)

1. Is the system totally mechanical? ( )Yes (X)No
   (If YES this Data Sheet is complete.)

2. Describe the location of the readiness indicator: Left side of center indicator panel

3. Is the readiness indicator clearly visible to the driver?
   (X)Yes-Pass ( )**No-FAIL**

4. Is a list of the elements in the occupant restraint system, being monitored by the readiness indicator, provided?
   (X)Yes-Pass ( )**No-FAIL**

Air Bag Labels Data

Vehicle Year/Make/Model/Body Style: 2002/Toyota/Avalon/4 Door

NHTSA No.: C25111 ; Technician: Chad Gadberry ; Date: December 10, 2002

1. Air bag maintenance label and owner's manual instructions (S4.5.1(a)):

   1.1. Does the manufacturer recommend periodic maintenance or replacement of the airbag? ( )Yes, go to 1.2 (X) No, go to 2

   1.2. Does the vehicle have a maintenance or replacement label? ( )Yes-Pass ( ) **No-FAIL**

   1.3. Does the label contain one of the following? ( )Yes-Pass ( ) **No-FAIL**
   ( ) Schedule on label specifies month and year (Date:_____)
   ( ) Schedule on label specifies vehicle mileage (Mileage:_____)
   ( ) Schedule on label specifies interval measured from date on certification label (Date:_____)

   1.4. Is the label permanently affixed within the passenger compartment? ( )Yes-Pass ( ) **No-FAIL**

   1.5. Is the label lettered in English? ( )Yes-Pass ( ) **No-FAIL**

   1.6. Is the label in block capitals and numerals? ( )Yes-Pass ( ) **No-FAIL**

   1.7. Are the letters and numerals at least 3/32 inches high? ( )Yes-Pass ( ) **No-FAIL**

   1.8. Does the owner's manual set forth the recommended schedule for maintenance or replacement? ( )Yes-Pass ( ) **No-FAIL**

2. Does the owner's manual (S4.5.1(f)):

   2.1 Include a description of the vehicle's airbag system in an easily understandable format? (X)Yes-Pass ( ) **No-FAIL**

   2.2 Include a statement that the vehicle is equipped with an airbag and a lap/shoulder belt at the front outboard seating positions? (X)Yes-Pass ( ) **No-FAIL**

2.3 Include a statement that the air bag is a supplemental restraint at the front outboard seating positions?

(X)Yes-Pass ( ) **No-FAIL**

2.4 Emphasize that all occupants, including the driver, should always wear their seat belts whether or not an airbag is also provided at their seating positions to minimize the risk of severe injury or death in the event of a crash?

(X)Yes-Pass ( ) **No-FAIL**

2.5 Provide any necessary precautions regarding the proper positioning of occupants, including children, at seating positions equipped with air bags to insure maximum safety protection for those occupants?

(X)Yes-Pass ( ) **No-FAIL**

2.6 Explain that no objects should be placed over or near the air bag on the steering wheel or on the instrument panel, because any such objects could cause harm if the vehicle is in a crash severe enough to cause the air bag to inflate?

(X)Yes-Pass ( ) **No-FAIL**

3. Does the vehicle:

3.1. Provide an automatic means to ensure that the airbag does not deploy when a child seat or child with a total mass of 30 kg or less is present on the front outboard passenger? ( )Yes (X) No

3.2. Incorporate sensors, other than or in addition to weight sensors, which automatically prevent the passenger air bag from deploying in situations in which it might have an adverse effect on infants in rear-facing child seats, and unbelted or improperly belted children? ( )Yes (X) No

3.3. Have a passenger air bag designed to deploy in a manner that does not create a risk of serious injury to infants in rear-facing child seats, and unbelted or improperly belted children? ( )Yes (X) No

If yes to 3.1, or 3.2, or 3.3, the vehicle is not required to have a sunvisor warning label (S4.5.1(6)), an airbag alert label (S4.5.1(c)) or a label on the dash (S4.5.2(e)) and this check sheet is complete (S4.5.1). If no to 3.1, 3.2, and 3.3, go to 4.

4. Sun Visor Warning Label

4.1. Is the label permanently affixed (may be permanent marking or molding) to either side of the sunvisor at each front outboard seating position with an airbag? (S4.5.1(b)(2))

Driver Side - (X)Yes-Pass ( ) **No-FAIL**
Passenger Side - ( ) N/A (X)Yes-Pass ( ) **No-FAIL**

4.2. Does the label conform in content (vehicles without back seats may omit the statement: "The back seat is the safest place for children.") (S4.5.1(b)(2)(v))) to either label shown on the next page as appropriate at each front outboard seating position with an air bag? (S4.5.1(b)(2))

4.2.1 **Dual air bags:** ( ) Not Applicable
Driver Side - (X)Yes-Pass ( ) **No-FAIL**
Passenger Side - (X)Yes-Pass ( ) **No-FAIL**

4.2.2 **Vehicle with driver air bag ONLY - either 4.2.2.1 or 4.2.2.2 is applicable, not both.** (S4.5.1(b)(2)(iv))

4.2.2.1 Does the label conform in content to either label shown on the following page as appropriate?
(X) Not Applicable
Driver Side - ( )Yes-Pass ( ) **No-FAIL**

4.2.2.2 Does the label conform in content to the first label shown on the following page where the label can be modified to omit the pictogram and the message text may read:

DEATH or SERIOUS INJURY can occur.
• Sit as far back as possible from the air bag.
• ALWAYS use SEAT BELTS and CHILD RESTRAINTS
• The BACK SEAT is the SAFEST place for children.

(X) Not Applicable
Driver Side - ( )Yes-Pass ( ) **No-FAIL**

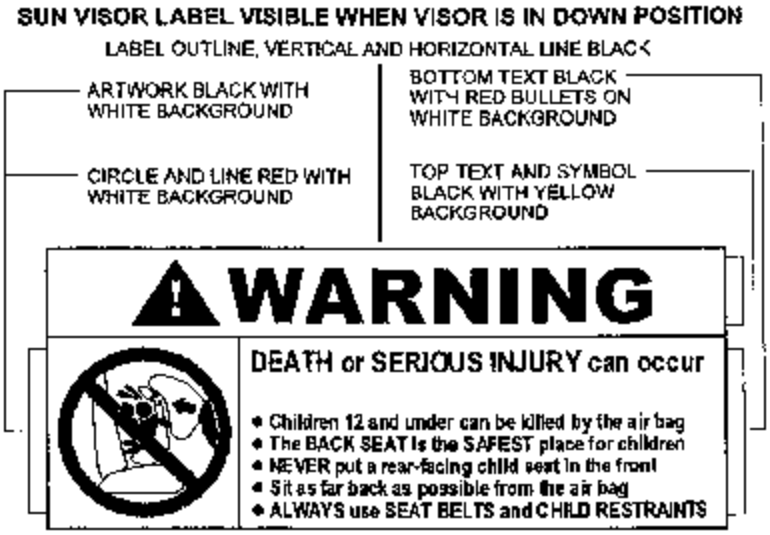

Figure 6a (S4.5.1(b)(2))

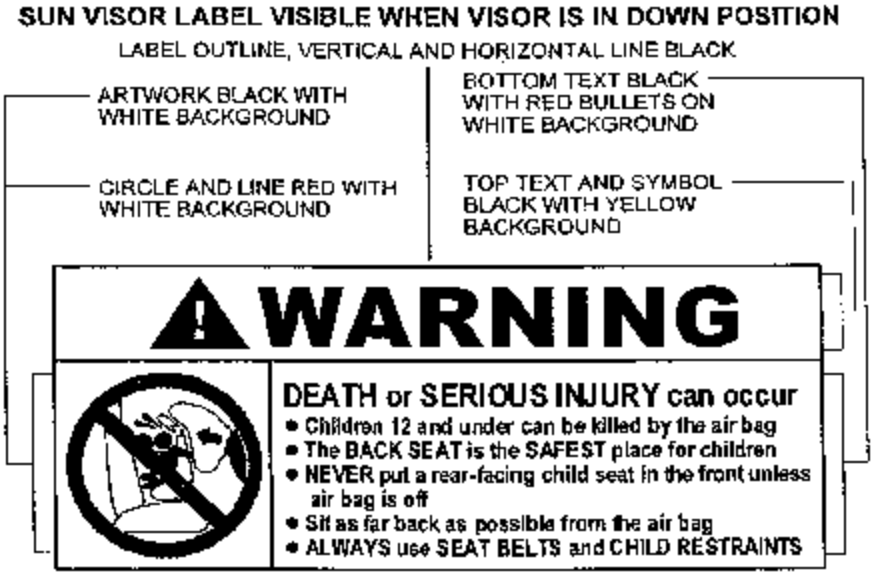

Figure 6b (S4.5.1(b)(2))

4.3 Is the label heading area yellow with the word "warning" and the alert symbol in black? (S4.5.1(b)(2)(i))

Driver Side -		(X)Yes-Pass	( ) **No-FAIL**
Passenger Side -	( ) No air bag	(X)Yes-Pass	( ) **No-FAIL**

4.4 Is the message white with black text? (S4.5.1(b)(2)(ii))

Driver Side -		(X)Yes-Pass	( ) **No-FAIL**
Passenger Side -	( ) No air bag	(X)Yes-Pass	( ) **No-FAIL**

4.5 Is the message area at least 30 cm^2? (S4.5.1(b)(2)(ii))
Actual message area: 65.0 cm^2

Driver Side -		(X)Yes-Pass	( ) **No-FAIL**
Passenger Side -	( ) No air bag	(X)Yes-Pass	( ) **No-FAIL**

4.6 Is the pictogram black with a red circle and slash on a white background? (S4.5.1(b)(2)(iii) & (S4.5.1(b)(2)(iv))

For vehicles with driver side air bag ONLY ( ) Not Applicable

Driver Side -		(X)Yes-Pass	( ) **No-FAIL**
Passenger Side -	( ) No air bag	(X)Yes-Pass	( ) **No-FAIL**

4.7 Is the pictogram at least 30 mm in diameter? (S4.5.1(b)(2)(iii))
Actual diameter: 31 mm

For vehicles with driver side air bag ONLY ( ) Not Applicable

Driver Side -		(X)Yes-Pass	( ) **No-FAIL**
Passenger Side -	( ) No air bag	(X)Yes-Pass	( ) **No-FAIL**

4.8 Is the same side of the sun visor to which the sun visor label is affixed free of other information with the exception of an air bag maintenance label? (S4.5.1(b)(3))

Driver Side -		(X)Yes-Pass	( ) **No-FAIL**
Passenger Side -	( ) No air bag	(X)Yes-Pass	( ) **No-FAIL**

4.9 Is the sun visor free of other information about air bags or the need to wear seat belts with the exception of the air bag alert label or the utility vehicle label? (S4.5.1(b)(3))

Driver Side -		(X)Yes-Pass	( ) **No-FAIL**
Passenger Side -	( ) No air bag	(X)Yes-Pass	( ) **No-FAIL**

5. Air Bag Alert Label

5.1 Is the Sun Visor Warning Label visible when the sunvisor is in the stowed position?

Driver Side -		(X)Yes, go to 6	( ) No
Passenger Side -	( )No air bag	(X)Yes	( ) No

5.2 Does the label conform in content to the label shown below? (S4.5.1(c)(2))

Driver Side -		( )Yes-Pass	( ) **No-FAIL**
Passenger Side -	( )No air bag	( )Yes-Pass	( ) **No-FAIL**

5.3 Is the message area black with yellow text? (S4.5.1(c)(2)(i))

Driver Side -		( )Yes-Pass	( ) **No-FAIL**
Passenger Side -	( )No air bag	( )Yes-Pass	( ) **No-FAIL**

5.4 Is the message area at least 20 cm^2? (S4.5.1(c)(2)(i))
Actual message area: _____ cm^2
Driver Side - ( )Yes-Pass ( ) **No-FAIL**
Passenger Side - ( )No air bag ( )Yes-Pass ( ) **No-FAIL**

5.5 Is the pictogram black with a red circle and slash on a white background? (S4.5.1(c)(2)(ii))
For vehicles with driver side air bag ONLY ( ) Not Applicable
( )Yes-Pass ( ) **No-FAIL**

5.6 Is the pictogram at least 20 mm in diameter? (S4.5.1(c)(2)(ii))
Actual diameter _____ mm
For vehicles with driver side air bag ONLY ( ) Not Applicable
( )Yes-Pass ( ) **No-FAIL**

Figure 6c (S4.5.1(c)(2))

6. Label On the Dash

6.1 Does the vehicle have a passenger side air bag?
(X)Yes ( ) No, check sheet is complete.

6.2 Does the vehicle have a label on the dash or steering wheel hub? (S4.5.1(e))
( )Yes-Pass (X) **No**

Note: The airbag warning label on the dash was removed prior to receiving the vehicle. It is not known whether the label was removed by the dealer, by a potential customer, or not installed at all.

6.3 Does the label conform in content (vehicles without back seats may omit the statement: "The back seat is the safest place for children 12 and under." (S4.5.1(e)(iii)) to the label shown below. (S4.5.1(e))
( )Yes-Pass ( ) **No-FAIL**

6.4 Is the heading area yellow with the word "warning" and the alert symbol in black? (S4.5.1(e)(i)) ( )Yes-Pass ( ) **No-FAIL**

6.5 Is the message white with black text? (S4.5.1(e)(ii))
( )Yes-Pass ( ) **No-FAIL**

6.6 Is the message area at least 30 cm^2? (S4.5.1(e)(ii))
Actual message area: ___ cm^2
( )Yes-Pass ( )**No-FAIL**

REMOVABLE LABEL ON DASH

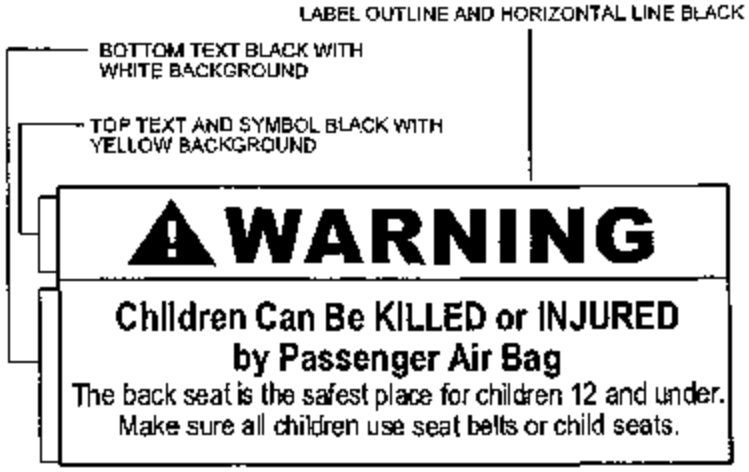

Figure 7 (S4.5.1(e))

Rear Outboard Seating Position Seat Belt Data

Vehicle Year/Make/Model/Body Style: 2002/Toyota/Avalon/4 Door

NHTSA No.: C25111 ; Technician: Chad Gadberry ; Date: December 10, 2002

Do all rear outboard seating positions have type 2 seat belts?

(X)Yes ( )No

If NO, describe the seat belt installed, the seat location, and any other information about the seat that would explain why a type 2 belt was not installed.

_____

_____

Lap Belt Lockability Data

Vehicle Year/Make/Model/Body Style: 2002/Toyota/Avalon/4 Door

NHTSA No.: C25111 ; Technician: Chad Gadberry ; Date: December 10, 2002

Passenger cars, trucks, buses, and multipurpose passenger vehicles with a GVWR of 10,000 pounds or less. (S7.1.1.5)

Complete one of these forms for **each** designated seating position with forward-facing seats, other than the driver's seat, or seats that can be adjusted to forward-facing **and** that has seat belt retractors that are not automatic locking retractors. (S7.1.1.5(c))

Designated Seating Position (DSP): Right Front

1. Record the seating position. Fully rearward
(S7.1.1.5(c)(1))
(Any position is acceptable.)

2. Buckle the seat belt. (S7.1.1.5(c)(1))

3. Complete any procedures recommended in the vehicle owner's manual to activate any locking feature. (S7.1.1.5(c)(1))

4. Does the lap belt portion of the seat belt in the forward-facing seat or seat that can be adjusted to forward-facing consist of a locking device that does NOT have to be attached by the vehicle user to the seat belt webbing, retractor, or any other part of the vehicle. (S7.1.1.5(a))

(X)Yes-Pass ( ) **No-FAIL**

5. Does the lap belt portion of the seat belt in the forward-facing seat or seat that can be adjusted to forward-facing consist of a locking device that does NOT require inverting, twisting or deforming of the belt webbing. (S7.1.1.5(a))

(X)Yes-Pass ( ) **No-FAIL**

6. Does the vehicle user need to take some action to activate the locking feature on the lap belt portion of the seat belt in any forward-facing seat or seat that can be adjusted to forward-facing? (X)Yes, go to 6.1 ( ) No, go to 7.

   6.1 Does the vehicle owner's manual include a description in words and/or diagrams describing how to activate the locking feature so that the seat belt assembly can tightly secure a child restraint system and how to deactivate the locking feature to remove the child restraint system. (S7.1.1.5(b))

   (X)Yes-Pass ( ) **No-FAIL**

7. Locate a reference point A on the seat belt buckle. (S7.1.1.5(c)(2))

8. Locate a reference point B on the attachment hardware or retractor assembly at the other end of the lap belt or lap belt portion of the seat belt assembly. (S7.1.1.5(c)(2))

9. Adjust the lap belt or lap belt portion of the seat belt assembly according to any procedures recommended in the vehicle owner's manual to activate any locking feature so that the webbing between points A and B is at the maximum length allowed by the belt system. (S7.1.1.5(c)(2))

10. Measure and record the distance between points A and B along the longitudinal centerline of the webbing for the lap belt or lap belt portion of the seat belt assembly. (S7.1.1.5(c)(2))

    Measured distance between A and B is 65.5 inches.

11. Readjust the belt system so that the webbing between points A and B is at any length that is 5 inches or more shorter than the maximum length of the webbing. (S7.1.1.5(c)(3))

12. To the lap belt or lap belt portion of the seat belt assembly, apply a preload of 10 pounds using the webbing tension pull device. Apply the load in a vertical plane parallel to the longitudinal axis of the vehicle and passing through the seating reference point of the designated seating position. Apply the preload in a horizontal direction toward the front of the vehicle with a force application angle of not less than 5 degrees nor more than 15 degrees above the horizontal. (S7.1.1.5(c)(4))

    The measured force application angle = 10 (spec. 5-15 degrees)

WEBBING TENSION PULL DEVICE

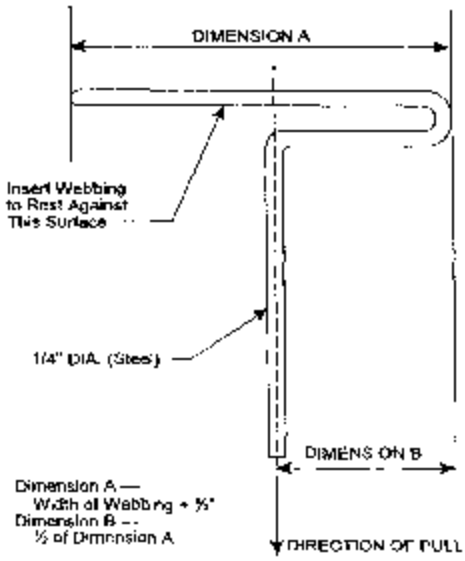

Figure 5 (S7.1.1.5(c)(4))

Lap Belt Lockability Data (Cont.)

13. Measure the length between points A and B along the longitudinal centerline of the webbing while the preload is being applied. (S7.1.1.5(c)(4))

    Measured distance between A and B is 33.0 inches.

14. Increase the load to 50 pounds at a rate of no more than 50 pounds per second. Attain the load in not more than 5 seconds. (If webbing sensitive emergency locking retractors are installed as part of the lap belt or lap belt portion of the seat belt assembly, apply the load at a rate less than the threshold value for lock-up specified by the manufacturer.) Maintain the load for at least 5 seconds. Measure and record the distance between points A and B along the longitudinal centerline of the webbing. (S7.1.1.5(c)(5))

    Record onset rate: 10 lb/sec (Spec. 10 to 50 lb/sec)

    Measure distance between points A and B 34.1 inches (S7.1.1.5(c)(6))

15. Subtract the measurement in 13 from the measurement in 14. Is the difference 2 inches or less? (S7.1.1.5(c)(7))

    14-13 = 1.1 inches (X)Yes-Pass ( ) **No-FAIL**

16. Subtract the measurement in 14 from the measurement in 10. Is the difference 3 inches or more?

    10-14 = 31.4 inches (X)Yes-Pass ( ) **No-FAIL**

REMARKS: None

Lap Belt Lockability Data (Cont.)

Vehicle Year/Make/Model/Body Style: 2002/Toyota/Avalon/4 Door

NHTSA No.: C25111 ; Technician: Chad Gadberry ; Date: December 10, 2002

Passenger cars, trucks, buses, and multipurpose passenger vehicles with a GVWR of 10,000 pounds or less. (S7.1.1.5)

Complete one of these forms for **each** designated seating position with forward-facing seats, other than the driver's seat, or seats that can be adjusted to forward-facing **and** that has seat belt retractors that are not automatic locking retractors. (S7.1.1.5(c))

Designated Seating Position (DSP): Left Rear

1. Record the seating position. Non-adjustable
   (S7.1.1.5(c)(1))
   (Any position is acceptable.)

2. Buckle the seat belt. (S7.1.1.5(c)(1))

3. Complete any procedures recommended in the vehicle owner's manual to activate any locking feature. (S7.1.1.5(c)(1))

4. Does the lap belt portion of the seat belt in the forward-facing seat or seat that can be adjusted to forward-facing consist of a locking device that does NOT have to be attached by the vehicle user to the seat belt webbing, retractor, or any other part of the vehicle. (S7.1.1.5(a))
   (X)Yes-Pass ( ) **No-FAIL**

5. Does the lap belt portion of the seat belt in the forward-facing seat or seat that can be adjusted to forward-facing consist of a locking device that does NOT require inverting, twisting or deforming of the belt webbing. (S7.1.1.5(a))
   (X)Yes-Pass ( ) **No-FAIL**

6. Does the vehicle user need to take some action to activate the locking feature on the lap belt portion of the seat belt in any forward-facing seat or seat that can be adjusted to forward-facing? (X)Yes, go to 6.1 ( ) No, go to 7.

   6.1 Does the vehicle owner's manual include a description in words and/or diagrams describing how to activate the locking feature so that the seat belt assembly can tightly secure a child restraint system and how to deactivate the locking feature to remove the child restraint system. (S7.1.1.5(b))
   (X)Yes-Pass ( ) **No-FAIL**

7. Locate a reference point A on the seat belt buckle. (S7.1.1.5(c)(2))

8. Locate a reference point B on the attachment hardware or retractor assembly at the other end of the lap belt or lap belt portion of the seat belt assembly. (S7.1.1.5(c)(2))

9. Adjust the lap belt or lap belt portion of the seat belt assembly according to any procedures recommended in the vehicle owner's manual to activate any locking feature so that the webbing between points A and B is at the maximum length allowed by the belt system. (S7.1.1.5(c)(2))

10. Measure and record the distance between points A and B along the longitudinal centerline of the webbing for the lap belt or lap belt portion of the seat belt assembly. (S7.1.1.5(c)(2))

    Measured distance between A and B is 61.6 inches.

11. Readjust the belt system so that the webbing between points A and B is at any length that is 5 inches or more shorter than the maximum length of the webbing. (S7.1.1.5(c)(3))

12. To the lap belt or lap belt portion of the seat belt assembly, apply a preload of 10 pounds using the webbing tension pull device. Apply the load in a vertical plane parallel to the longitudinal axis of the vehicle and passing through the seating reference point of the designated seating position. Apply the preload in a horizontal direction toward the front of the vehicle with a force application angle of not less than 5 degrees nor more than 15 degrees above the horizontal. (S7.1.1.5(c)(4))

    The measured force application angle = 10 (spec. 5-15 degrees)

WEBBING TENSION PULL DEVICE

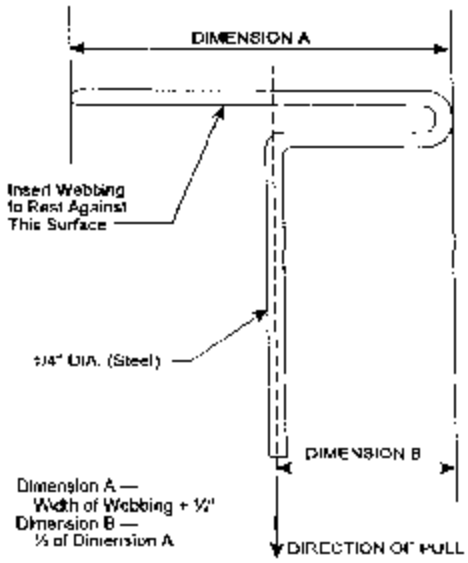

Figure 5 (S7.1.1.5(c)(4))

Lap Belt Lockability Data (Cont.)

13. Measure the length between points A and B along the longitudinal centerline of the webbing while the preload is being applied. (S7.1.1.5(c)(4))

    Measured distance between A and B is 23.7 inches.

14. Increase the load to 50 pounds at a rate of no more than 50 pounds per second. Attain the load in not more than 5 seconds. (If webbing sensitive emergency locking retractors are installed as part of the lap belt or lap belt portion of the seat belt assembly, apply the load at a rate less than the threshold value for lock-up specified by the manufacturer.) Maintain the load for at least 5 seconds. Measure and record the distance between points A and B along the longitudinal centerline of the webbing. (S7.1.1.5(c)(5))

    Record onset rate: 10 lb/sec (Spec. 10 to 50 lb/sec)

    Measure distance between points A and B 24.1 inches (S7.1.1.5(c)(6))

15. Subtract the measurement in 13 from the measurement in 14. Is the difference 2 inches or less? (S7.1.1.5(c)(7))

    14-13 = 0.4 inches (X)Yes-Pass ( ) **No-FAIL**

16. Subtract the measurement in 14 from the measurement in 10. Is the difference 3 inches or more?

    10-14 = 37.5 inches (X)Yes-Pass ( ) **No-FAIL**

REMARKS: None

Lap Belt Lockability Data (Cont.)

Vehicle Year/Make/Model/Body Style: 2002/Toyota/Avalon/4 Door

NHTSA No.: C25111 ; Technician: Chad Gadberry ; Date: December 10, 2002

Passenger cars, trucks, buses, and multipurpose passenger vehicles with a GVWR of 10,000 pounds or less. (S7.1.1.5)

Complete one of these forms for **each** designated seating position with forward-facing seats, other than the driver's seat, or seats that can be adjusted to forward-facing **and** that has seat belt retractors that are not automatic locking retractors. (S7.1.1.5(c))

Designated Seating Position (DSP): Center Rear

1. Record the seating position. Non-adjustable
(S7.1.1.5(c)(1))
(Any position is acceptable.)

2. Buckle the seat belt. (S7.1.1.5(c)(1))

3. Complete any procedures recommended in the vehicle owner's manual to activate any locking feature. (S7.1.1.5(c)(1))

4. Does the lap belt portion of the seat belt in the forward-facing seat or seat that can be adjusted to forward-facing consist of a locking device that does NOT have to be attached by the vehicle user to the seat belt webbing, retractor, or any other part of the vehicle. (S7.1.1.5(a))
(X)Yes-Pass ( ) **No-FAIL**

5. Does the lap belt portion of the seat belt in the forward-facing seat or seat that can be adjusted to forward-facing consist of a locking device that does NOT require inverting, twisting or deforming of the belt webbing. (S7.1.1.5(a))
(X)Yes-Pass ( ) **No-FAIL**

6. Does the vehicle user need to take some action to activate the locking feature on the lap belt portion of the seat belt in any forward-facing seat or seat that can be adjusted to forward-facing? (X)Yes, go to 6.1 ( ) No, go to 7.

   6.1 Does the vehicle owner's manual include a description in words and/or diagrams describing how to activate the locking feature so that the seat belt assembly can tightly secure a child restraint system and how to deactivate the locking feature to remove the child restraint system. (S7.1.1.5(b))
   (X)Yes-Pass ( ) **No-FAIL**

7. Locate a reference point A on the seat belt buckle. (S7.1.1.5(c)(2))

8. Locate a reference point B on the attachment hardware or retractor assembly at the other end of the lap belt or lap belt portion of the seat belt assembly. (S7.1.1.5(c)(2))

9. Adjust the lap belt or lap belt portion of the seat belt assembly according to any procedures recommended in the vehicle owner's manual to activate any locking feature so that the webbing between points A and B is at the maximum length allowed by the belt system. (S7.1.1.5(c)(2))

10. Measure and record the distance between points A and B along the longitudinal centerline of the webbing for the lap belt or lap belt portion of the seat belt assembly. (S7.1.1.5(c)(2))

    Measured distance between A and B is _69.4_ inches.

11. Readjust the belt system so that the webbing between points A and B is at any length that is 5 inches or more shorter than the maximum length of the webbing. (S7.1.1.5(c)(3))

12. To the lap belt or lap belt portion of the seat belt assembly, apply a preload of 10 pounds using the webbing tension pull device. Apply the load in a vertical plane parallel to the longitudinal axis of the vehicle and passing through the seating reference point of the designated seating position. Apply the preload in a horizontal direction toward the front of the vehicle with a force application angle of not less than 5 degrees nor more than 15 degrees above the horizontal. (S7.1.1.5(c)(4))

    The measured force application angle = _10_ (spec. 5-15 degrees)

WEBBING TENSION PULL DEVICE

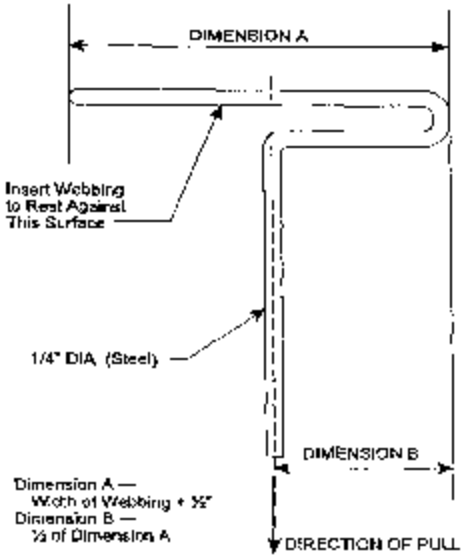

Figure 5 (S7.1.1.5(c)(4))

Lap Belt Lockability Data (Cont.)

13. Measure the length between points A and B along the longitudinal centerline of the webbing while the preload is being applied. (S7.1.1.5(c)(4))

    Measured distance between A and B is 27.0 inches.

14. Increase the load to 50 pounds at a rate of no more than 50 pounds per second. Attain the load in not more than 5 seconds. (If webbing sensitive emergency locking retractors are installed as part of the lap belt or lap belt portion of the seat belt assembly, apply the load at a rate less than the threshold value for lock-up specified by the manufacturer.) Maintain the load for at least 5 seconds. Measure and record the distance between points A and B along the longitudinal centerline of the webbing. (S7.1.1.5(c)(5))

    Record onset rate: 10 lb/sec (Spec. 10 to 50 lb/sec)

    Measure distance between points A and B 28.6 inches (S7.1.1.5(c)(6))

15. Subtract the measurement in 13 from the measurement in 14. Is the difference 2 inches or less? (S7.1.1.5(c)(7))

    14-13 = 1.6 inches (X)Yes-Pass ( ) **No-FAIL**

16. Subtract the measurement in 14 from the measurement in 10. Is the difference 3 inches or more?

    10-14 = 40.8 inches (X)Yes-Pass ( ) **No-FAIL**

REMARKS: None

Lap Belt Lockability Data (Cont.)

Vehicle Year/Make/Model/Body Style: 2002/Toyota/Avalon/4 Door

NHTSA No.: C25111 ; Technician: Chad Gadberry ; Date: December 10, 2002

Passenger cars, trucks, buses, and multipurpose passenger vehicles with a GVWR of 10,000 pounds or less. (S7.1.1.5)

Complete one of these forms for **each** designated seating position with forward-facing seats, other than the driver's seat, or seats that can be adjusted to forward-facing **and** that has seat belt retractors that are not automatic locking retractors. (S7.1.1.5(c))

Designated Seating Position (DSP): Right Rear

1. Record the seating position. Non-adjustable
(S7.1.1.5(c)(1))
(Any position is acceptable.)

2. Buckle the seat belt. (S7.1.1.5(c)(1))

3. Complete any procedures recommended in the vehicle owner's manual to activate any locking feature. (S7.1.1.5(c)(1))

4. Does the lap belt portion of the seat belt in the forward-facing seat or seat that can be adjusted to forward-facing consist of a locking device that does NOT have to be attached by the vehicle user to the seat belt webbing, retractor, or any other part of the vehicle. (S7.1.1.5(a))
(X)Yes-Pass ( ) **No-FAIL**

5. Does the lap belt portion of the seat belt in the forward-facing seat or seat that can be adjusted to forward-facing consist of a locking device that does NOT require inverting, twisting or deforming of the belt webbing. (S7.1.1.5(a))
(X)Yes-Pass ( ) **No-FAIL**

6. Does the vehicle user need to take some action to activate the locking feature on the lap belt portion of the seat belt in any forward-facing seat or seat that can be adjusted to forward-facing? (X)Yes, go to 6.1 ( ) No, go to 7.

   6.1 Does the vehicle owner's manual include a description in words and/or diagrams describing how to activate the locking feature so that the seat belt assembly can tightly secure a child restraint system and how to deactivate the locking feature to remove the child restraint system. (S7.1.1.5(b))
   (X)Yes-Pass ( ) **No-FAIL**

7. Locate a reference point A on the seat belt buckle. (S7.1.1.5(c)(2))

8. Locate a reference point B on the attachment hardware or retractor assembly at the other end of the lap belt or lap belt portion of the seat belt assembly. (S7.1.1.5(c)(2))

9. Adjust the lap belt or lap belt portion of the seat belt assembly according to any procedures recommended in the vehicle owner's manual to activate any locking feature so that the webbing between points A and B is at the maximum length allowed by the belt system. (S7.1.1.5(c)(2))

10. Measure and record the distance between points A and B along the longitudinal centerline of the webbing for the lap belt or lap belt portion of the seat belt assembly. (S7.1.1.5(c)(2))

    Measured distance between A and B is 62.3 inches.

11. Readjust the belt system so that the webbing between points A and B is at any length that is 5 inches or more shorter than the maximum length of the webbing. (S7.1.1.5(c)(3))

12. To the lap belt or lap belt portion of the seat belt assembly, apply a preload of 10 pounds using the webbing tension pull device. Apply the load in a vertical plane parallel to the longitudinal axis of the vehicle and passing through the seating reference point of the designated seating position. Apply the preload in a horizontal direction toward the front of the vehicle with a force application angle of not less than 5 degrees nor more than 15 degrees above the horizontal. (S7.1.1.5(c)(4))

    The measured force application angle = 10 (spec. 5-15 degrees)

WEBBING TENSION PULL DEVICE

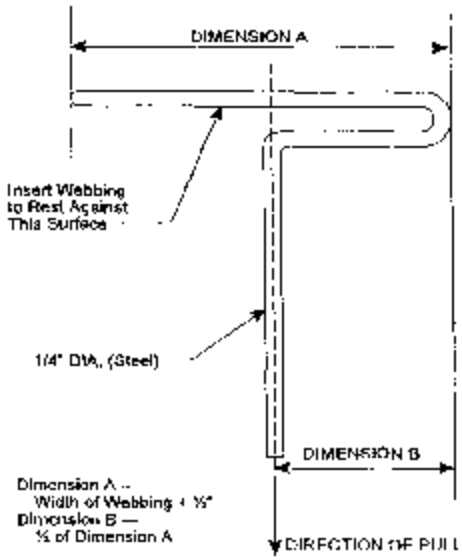

Figure 5 (S7.1.1.5(c)(4))

Lap Belt Lockability Data (Cont.)

13. Measure the length between points A and B along the longitudinal centerline of the webbing while the preload is being applied. (S7.1.1.5(c)(4))

    Measured distance between A and B is 26.5 inches.

14. Increase the load to 50 pounds at a rate of no more than 50 pounds per second. Attain the load in not more than 5 seconds. (If webbing sensitive emergency locking retractors are installed as part of the lap belt or lap belt portion of the seat belt assembly, apply the load at a rate less than the threshold value for lock-up specified by the manufacturer.) Maintain the load for at least 5 seconds. Measure and record the distance between points A and B along the longitudinal centerline of the webbing. (S7.1.1.5(c)(5))

    Record onset rate: 10 lb/sec (Spec. 10 to 50 lb/sec)

    Measure distance between points A and B 26.8 inches (S7.1.1.5(c)(6))

15. Subtract the measurement in 13 from the measurement in 14. Is the difference 2 inches or less? (S7.1.1.5(c)(7))

    14-13 = 0.3 inches (X)Yes-Pass ( ) **No-FAIL**

16. Subtract the measurement in 14 from the measurement in 10. Is the difference 3 inches or more?

    10-14 = 35.5 inches (X)Yes-Pass ( ) **No-FAIL**

REMARKS: None

Seat Belt Comfort and Convenience Data

1. **BELT CONTACT FORCE (S7.4.3)**

Test Vehicle NHTSA No.:C25111

Vehicle Model Year/Make/Model/Body Style: 2002/Toyota/Avalon/4 Door

Designated Seating Position Tested: Left Rear

Date of Comfort/Convenience Check: December 10, 2002

Technician Performing Check: Chad Gadberry

GVWR: 4550 lb

Test all Type 2 seat belts other than those in walk-in van-type vehicles and those at front outboard designated seating positions in passenger cars. Complete a form for each applicable seat belt.

1.1 Does the vehicle incorporate a webbing tension-relieving device?
( ) Yes - go to latchplate access
(X) No - continue with this check sheet

1.2 Adjustable seats are in adjustment position midway between the forward most and rearmost positions. If an adjustment position does not exist midway between the forward most and rearmost positions, the next closest adjustment position to the rear of the midpoint is used. (S8.1.2)
( ) Check
(X) N/A

1.3 If separately adjustable in a vertical direction, the seats are at the lowest position.
( ) Check
(X) N/A

1.4 Place adjustable seat backs in the manufacturer's nominal design riding position in the manner specified by the manufacturer.
( ) Check
(X) N/A

1.5 Place any adjustable anchorages at the manufacturer's nominal design position for a 50th percentile adult male (50M) occupant. This information will be furnished by the COTR.
( ) Check
(X) N/A

1.6 Place each adjustable head restraint in its highest adjustment position.
(X) Check
( ) N/A

1.7 Adjustable lumbar supports are positioned so that the lumbar support is in its lowest adjustment position. (S8.1.3)

( ) Check
(X) N/A

1.8 Position the test dummies according to dummy position placement instructions in Appendix B.

(X) Check

1.9 Fasten the seat belt latch. Pull either 12 inches of belt webbing or the maximum available amount of belt webbing, whichever is less, from the retractor and then release it, allowing the belt webbing to return to the dummy's chest. Locate the point where the centerline of the upper torso belt webbing crosses the midsagittal line on the dummy's chest. At that point, pull the belt webbing out 3 inches from the dummy's chest and release until it is within one inch from the dummy's chest. (S10.8) Measure the contact force exerted by the belt webbing on the dummy's chest. Contact the COTR if the contact force exceeds 0.7 pounds.

Contact Force 0.6 lb. (X) 0.0 to 0.7 pounds - Pass
( ) greater than 0.7 pounds - FAIL*

* If the seat belts are voluntarily installed by the manufacturer they do not have to comply.

Seat Belt Comfort and Convenience Data (Cont.)

1. **BELT CONTACT FORCE (S7.4.3)**

Test Vehicle NHTSA No.:C25111

Vehicle Model Year/Make/Model/Body Style: 2002/Toyota/Avalon/4 Door

Designated Seating Position Tested: Center Rear

Date of Comfort/Convenience Check: December 10, 2002

Technician Performing Check: Chad Gadberry

GVWR: 4550 lb

Test all Type 2 seat belts other than those in walk-in van-type vehicles and those at front outboard designated seating positions in passenger cars. Complete a form for each applicable seat belt.

1.1 Does the vehicle incorporate a webbing tension-relieving device?

( ) Yes - go to latchplate access
(X) No - continue with this check sheet

1.2 Adjustable seats are in adjustment position midway between the forward most and rearmost positions. If an adjustment position does not exist midway between the forward most and rearmost positions, the next closest adjustment position to the rear of the midpoint is used. (S8.1.2)

( ) Check
(X) N/A

1.3 If separately adjustable in a vertical direction, the seats are at the lowest position.

( ) Check
(X) N/A

1.4 Place adjustable seat backs in the manufacturer's nominal design riding position in the manner specified by the manufacturer.

( ) Check
(X) N/A

1.5 Place any adjustable anchorages at the manufacturer's nominal design position for a 50th percentile adult male (50M) occupant. This information will be furnished by the COTR.

( ) Check
(X) N/A

1.6 Place each adjustable head restraint in its highest adjustment position.

(X) Check
( ) N/A

1.7 Adjustable lumbar supports are positioned so that the lumbar support is in its lowest adjustment position. (S8.1.3)

( ) Check
(X) N/A

1.8 Position the test dummies according to dummy position placement instructions in Appendix B.

(X) Check

1.9 Fasten the seat belt latch. Pull either 12 inches of belt webbing or the maximum available amount of belt webbing, whichever is less, from the retractor and then release it, allowing the belt webbing to return to the dummy's chest. Locate the point where the centerline of the upper torso belt webbing crosses the midsagittal line on the dummy's chest. At that point, pull the belt webbing out 3 inches from the dummy's chest and release until it is within one inch from the dummy's chest. (S10.8) Measure the contact force exerted by the belt webbing on the dummy's chest. Contact the COTR if the contact force exceeds 0.7 pounds.

Contact Force 0.3 lb. (X) 0.0 to 0.7 pounds - Pass
( ) greater than 0.7 pounds - FAIL*

* If the seat belts are voluntarily installed by the manufacturer they do not have to comply.

Seat Belt Comfort and Convenience Data (Cont.)

1. **BELT CONTACT FORCE (S7.4.3)**

Test Vehicle NHTSA No.: C25111

Vehicle Model Year/Make/Model/Body Style: 2002/Toyota/Avalon/4 Door

Designated Seating Position Tested: Right Rear

Date of Comfort/Convenience Check: December 10, 2002

Technician Performing Check: Chad Gadberry

GVWR: 4550 lb

Test all Type 2 seat belts other than those in walk-in van-type vehicles and those at front outboard designated seating positions in passenger cars. Complete a form for each applicable seat belt.

1.1 Does the vehicle incorporate a webbing tension-relieving device?

( ) Yes - go to latchplate access
(X) No - continue with this check sheet

1.2 Adjustable seats are in adjustment position midway between the forward most and rearmost positions. If an adjustment position does not exist midway between the forward most and rearmost positions, the next closest adjustment position to the rear of the midpoint is used. (S8.1.2)

( ) Check
(X) N/A

1.3 If separately adjustable in a vertical direction, the seats are at the lowest position.

( ) Check
(X) N/A

1.4 Place adjustable seat backs in the manufacturer's nominal design riding position in the manner specified by the manufacturer.

( ) Check
(X) N/A

1.5 Place any adjustable anchorages at the manufacturer's nominal design position for a 50th percentile adult male (50M) occupant. This information will be furnished by the COTR.

( ) Check
(X) N/A

1.6 Place each adjustable head restraint in its highest adjustment position.

(X) Check
( ) N/A

1.7 Adjustable lumbar supports are positioned so that the lumbar support is in its lowest adjustment position. (S8.1.3)

( ) Check
(X) N/A

1.8 Position the test dummies according to dummy position placement instructions in Appendix B.

(X) Check

1.9 Fasten the seat belt latch. Pull either 12 inches of belt webbing or the maximum available amount of belt webbing, whichever is less, from the retractor and then release it, allowing the belt webbing to return to the dummy's chest. Locate the point where the centerline of the upper torso belt webbing crosses the midsagittal line on the dummy's chest. At that point, pull the belt webbing out 3 inches from the dummy's chest and release until it is within one inch from the dummy's chest. (S10.8) Measure the contact force exerted by the belt webbing on the dummy's chest. Contact the COTR if the contact force exceeds 0.7 pounds.

Contact Force 0.6 lb. (X) 0.0 to 0.7 pounds - Pass
( ) greater than 0.7 pounds - FAIL*

* If the seat belts are voluntarily installed by the manufacturer they do not have to comply.

2. LATCHPLATE ACCESS (S7.4.4)

Test Vehicle NHTSA No.:C25111

Vehicle Model Year/Make/Model/Body Style: 2002/Toyota/Avalon/4 Door

Designated Seating Position Tested: **Not applicable - passenger car**

Date of Comfort/Convenience Check:_____

Technician Performing Check:_____

GVWR: _____

Test all front outboard seat belts other than those in walk-in van-type vehicles and those at front outboard designated seating positions in passenger cars. Complete a form for each applicable seat belt.

2.1 Position the seat in its forward most adjustment position.
( ) Check

2.2 Position the test dummy using the procedures in Appendix B. (Some modifications to the positioning procedure may need to be made because the seat is in its forward most position.)
( ) Check

2.3 Position the adjustable seat belt anchorage in the manufacturer's nominal design position for a 50th percentile adult male occupant.
( ) Check

2.4 Attach the inboard and outboard reach string following the instructions on Figure 1C.
( ) Check

2.5 Place the latch plate in the stowed position.
( ) Check

2.6 Extend each line backward and outboard to generate arcs of the reach envelop of the test dummy's arms. Is the latch plate within the reach envelope?
( )Yes-Pass ( ) **No-FAIL**

2.7 Using the clearance test block, specified in Figure 2C, is there sufficient clearance between the vehicle seat and the side of vehicle interior to allow the test block to move unhindered to the latch plate or buckle?
( )Yes-Pass ( ) **No-FAIL**

3. **RETRACTION (S7.4.5)**

Test Vehicle NHTSA No.:C25111

Vehicle Model Year/Make/Model/Body Style: 2002/Toyota/Avalon/4 Door

Designated Seating Position Tested: **Not applicable - passenger car**

Date of Comfort/Convenience Check:_____

Technician Performing Check:_____

GVWR: _____

Test all front outboard seat belts other than those in walk-in van-type vehicles and those at front outboard designated seating positions in passenger cars. Complete a form for each applicable seat belt.

3.1 Is the vehicle a passenger car or walk-in van-type vehicle?
( )Yes If yes, go to seat belt guides and hardware.
( ) No

3.2 Adjustable seats are in the adjustment position midway between the forward most and rearmost positions. If an adjustment position does not exist midway between the forward most and rearmost positions, the next closest adjustment position to the rear of the midpoint is used. (S8.1.2)
( ) Check

3.3 If separately adjustable in a vertical direction, the seats are at the lowest position.
( ) Check

3.4 Place adjustable seat backs in the manufacturer's nominal design riding position in the manner specified by the manufacturer.
( ) Check

3.5 Place any adjustable anchorages at the manufacturer's nominal design position for a 50th percentile adult male (50M) occupant. This information will be furnished by the COTR.
( ) Check

3.6 Place each adjustable head restraint in its highest adjustment position.
( ) Check

3.7 Adjustable lumbar supports are positioned so that the lumbar support is in its lowest adjustment position (S8.1.3)
( ) Check

3.8 Use anthropomorphic test dummies whose arms have been removed and position the dummies in the front outboard designated seating positions according to instructions in Appendix B.

( ) Check

3.9 Restrain the dummies using the belt systems for the position being tested.

( ) Check

3.10 Stow outboard armrests which are capable of being stowed.

( ) Check

3.11 Check the statement that applies to this test vehicle:

(A) The torso and lap belt webbing of the seat belt system automatically retracts to a stowed position when the adjacent vehicle door is in an open position and the seat belt latch plate is released.

( ) Pass

(B) The torso and lap belt webbing of the seat belt system automatically retracts when the seat belt latch plate is released.

( ) Pass

(C) Neither A or B apply.

( ) **FAIL**

3.12 With the webbing and hardware in the stowed position are the webbing and hardware prevented from being pinched when the door is closed?

( )Yes - Pass
( ) **No - FAIL**

3.13 If this test vehicle has an open body (without doors) and has a seat belt system with a tension-relieving device, does the belt system fully retract when the tension-relieving device is deactivated?

( ) N/A
( ) Yes - Pass
( ) **No - FAIL**

4. SEAT BELT GUIDES AND HARDWARE (S7.4.6)

Test Vehicle NHTSA No.: C25111

Vehicle Model Year/Make/Model/Body Style: 2002/Toyota/Avalon/4 Door

Designated Seating Position Tested: Left Rear

Date of Comfort/Convenience Check: December 10, 2002

Technician Performing Check: Chad Gadberry

GVWR: 4550 lb

Test seat belts except those in walk-in van-type vehicles and those at front outboard designated seating positions in passenger cars. Complete a form for each applicable seat belt.

The requirements for accessibility **DO NOT APPLY** to:

A. Seats whose seat cushions are movable so that the seat back serves a function other than seating (S7.4.6.1(b))

B. Seats which are removable.

C. Seats which are movable so that the space formerly occupied by the seat can be used for a secondary function.

If the seats in this vehicle are different than the criteria above determine the following:

4.1 Is the webbing designed to pass through the seat cushion or between the seat cushion and seat back?

(X)Yes - Go to 4.2.
( ) No - this form is complete

4.2 Does one of the following three parts, the seat belt latch plate, the buckle, or the seat belt webbing, stay on top of or above the seat cushion under normal conditions (i.e., conditions other than when belt hardware is intentionally pushed behind the seat by a vehicle occupant)?

(X)Yes - Pass
( ) **No - FAIL**

4.3 Are the remaining two seat belt parts accessible under normal conditions?

(X)Yes - Pass
( ) **No - FAIL**

4.4 The buckle and latch plate do not pass through the guides or conduits provided and fall behind the seat when the following events occur in order:

(A) The belt is completely retracted or, if the belt is nonretractable, the belt is unlatched. (X) Check

(B) The seat is moved to any position to which it is designed to be adjusted.
(X) Check

(C) The seat back, if foldable, is folded forward as far as possible and then moved backward into position.
(X) Check

(X)Yes - Pass
( ) **No - FAIL**

4.5 Is the inboard receptacle end of the seat belt assembly, installed in the outboard designated seating position, accessible with the center arm rest in any position to which it can be adjusted (without moving the armrest)?
(X) Yes - Pass
( ) **No - FAIL**

4. **SEAT BELT GUIDES AND HARDWARE (S7.4.6)**

Test Vehicle NHTSA No.:C25111

Vehicle Model Year/Make/Model/Body Style: 2002/Toyota/Avalon/4 Door

Designated Seating Position Tested: Center Rear

Date of Comfort/Convenience Check: December 10, 2002

Technician Performing Check: Chad Gadberry

GVWR: 4550 lb

Test seat belts except those in walk-in van-type vehicles and those at front outboard designated seating positions in passenger cars. Complete a form for each applicable seat belt.

The requirements for accessibility **DO NOT APPLY** to:

A. Seats whose seat cushions are movable so that the seat back serves a function other than seating (S7.4.6.1(b))

B. Seats which are removable.

C. Seats which are movable so that the space formerly occupied by the seat can be used for a secondary function.

If the seats in this vehicle are different than the criteria above determine the following:

4.1 Is the webbing designed to pass through the seat cushion or between the seat cushion and seat back?

(X)Yes - Go to 4.2.
( ) No - this form is complete

4.2 Does one of the following three parts, the seat belt latch plate, the buckle, or the seat belt webbing, stay on top of or above the seat cushion under normal conditions (i.e., conditions other than when belt hardware is intentionally pushed behind the seat by a vehicle occupant)?

(X)Yes - Pass
( ) **No - FAIL**

4.3 Are the remaining two seat belt parts accessible under normal conditions?

(X)Yes - Pass
( ) **No - FAIL**

4.4 The buckle and latch plate do not pass through the guides or conduits provided and fall behind the seat when the following events occur in order:

(A) The belt is completely retracted or, if the belt is nonretractable, the belt is unlatched. (X) Check

(B) The seat is moved to any position to which it is designed to be adjusted.
(X) Check

(C) The seat back, if foldable, is folded forward as far as possible and then moved backward into position.
(X) Check

(X)Yes - Pass
( ) **No - FAIL**

4.5 Is the inboard receptacle end of the seat belt assembly, installed in the outboard designated seating position, accessible with the center arm rest in any position to which it can be adjusted (without moving the armrest)?
(X) Yes - Pass
( ) **No - FAIL**

4. **SEAT BELT GUIDES AND HARDWARE (S7.4.6)**

Test Vehicle NHTSA No.: C25111

Vehicle Model Year/Make/Model/Body Style: 2002/Toyota/Avalon/4 Door

Designated Seating Position Tested: Right Rear

Date of Comfort/Convenience Check: December 10, 2002

Technician Performing Check: Chad Gadberry

GVWR: 4550 lb

Test seat belts except those in walk-in van-type vehicles and those at front outboard designated seating positions in passenger cars. Complete a form for each applicable seat belt.

The requirements for accessibility **DO NOT APPLY** to:

A. Seats whose seat cushions are movable so that the seat back serves a function other than seating (S7.4.6.1(b))

B. Seats which are removable.

C. Seats which are movable so that the space formerly occupied by the seat can be used for a secondary function.

If the seats in this vehicle are different than the criteria above determine the following:

4.1 Is the webbing designed to pass through the seat cushion or between the seat cushion and seat back?

(X)Yes - Go to 4.2.
( ) No - this form is complete

4.2 Does one of the following three parts, the seat belt latch plate, the buckle, or the seat belt webbing, stay on top of or above the seat cushion under normal conditions (i.e., conditions other than when belt hardware is intentionally pushed behind the seat by a vehicle occupant)?

(X)Yes - Pass
( ) **No - FAIL**

4.3 Are the remaining two seat belt parts accessible under normal conditions?

(X)Yes - Pass
( ) **No - FAIL**

4.4 The buckle and latch plate do not pass through the guides or conduits provided and fall behind the seat when the following events occur in order:

(A) The belt is completely retracted or, if the belt is nonretractable, the belt is unlatched. (X) Check

(B) The seat is moved to any position to which it is designed to be adjusted.
(X) Check

(C) The seat back, if foldable, is folded forward as far as possible and then moved backward into position.
(X) Check

(X)Yes - Pass
( ) **No - FAIL**

4.5 Is the inboard receptacle end of the seat belt assembly, installed in the outboard designated seating position, accessible with the center arm rest in any position to which it can be adjusted (without moving the armrest)?
(X) Yes - Pass
( ) **No - FAIL**

LOCATION OF ANCHORING POINTS FOR LATCHPLATE REACH LIMITING CHAINS OR STRINGS TO TEST FOR LATCHPLATE ACCESSIBILITY

PART 572E DUMMY

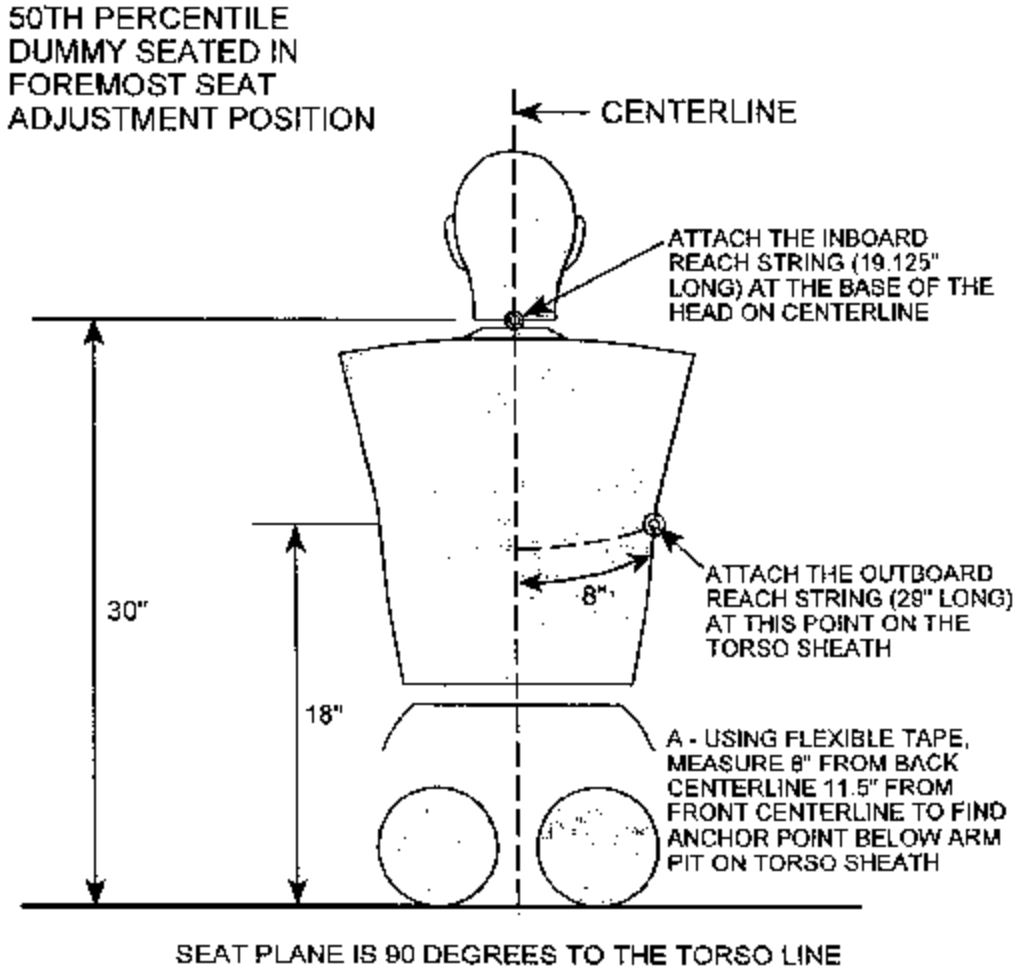

REAR VIEW

LOCATION OF ANCHORING POINTS FOR LATCHPLATE REACH LIMITING CHAINS OR STRINGS TO TEST FOR LATCHPLATE ACCESSIBILITY

PART 572E DUMMY

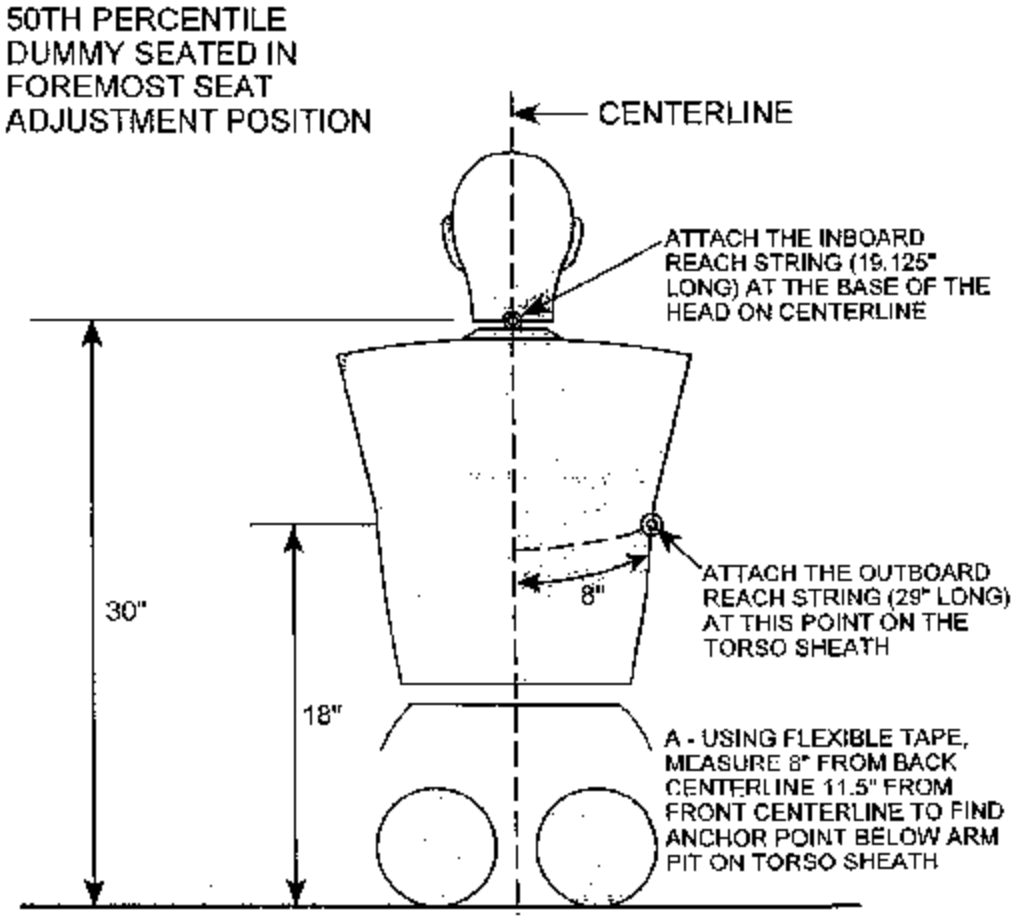

REAR VIEW

USE OF CLEARANCE TEST BLOCK TO DETERMINE HAND/ARM ACCESS

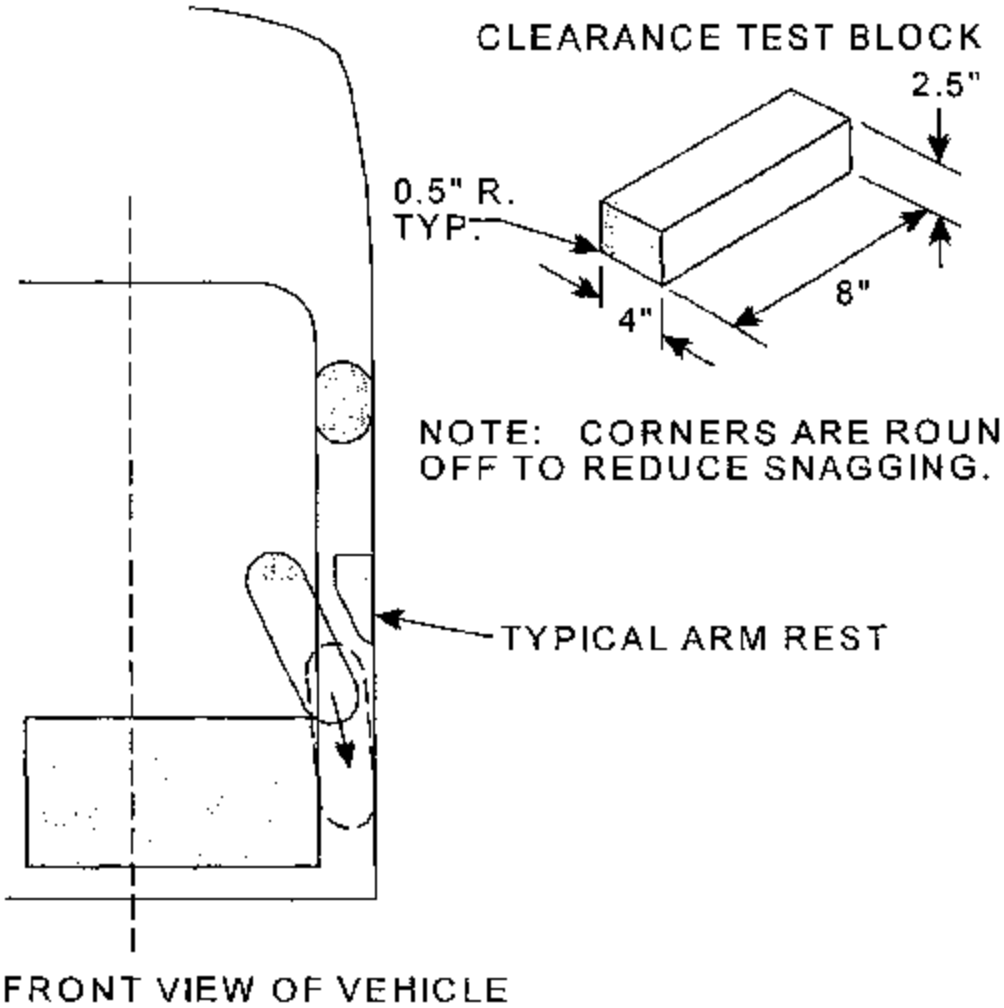

APPENDIX A
PHOTOGRAPHS

TABLE OF PHOTOGRAPHS

Description	Page No.
Photo No. A-1 - Pre-Test Frontal View	A-1
Photo No. A-2 - Pre-Test Left Side View	A-2
Photo No. A-3 - Pre-Test Right Side View	A-3
Photo No. A-4 - Pre-Test Windshield View	A-4
Photo No. A-5 - Post-Test Windshield View	A-5
Photo No. A-6 - Pre-Test Driver Dummy Position View (Door Open)	A-6
Photo No. A-7 - Post-Test Driver Dummy Position View (Door Open)	A-7
Photo No. A-8 - Pre-Test Driver Dummy Position View	A-8
Photo No. A-9 - Post-Test Driver Dummy Position View	A-9
Photo No. A-10 - Pre-Test Passenger Dummy Position View (Door Open)	A-10
Photo No. A-11 - Post-Test Passenger Dummy Position View (Door Open)	A-11
Photo No. A-12 - Pre-Test Passenger Dummy Position View	A-12
Photo No. A-13 - Post-Test Passenger Dummy Position View	A-13
Photo No. A-14 - Post-Test Driver Airbag View	A-14
Photo No. A-15 - Post-Test Driver Head Contact View (visor/header)	A-15
Photo No. A-16 - Post-Test Driver Head Contact View (windshield)	A-16
Photo No. A-17 - Post-Test Passenger Dummy Airbag View	A-17
Photo No. A-18 - Post-Test Passenger Dummy Head Contact View	A-18
Photo No. A-19 - Pre-Test Driver Knee Bolster View	A-19
Photo No. A-20 - Post-Test Driver Knee Bolster View	A-20
Photo No. A-21 - Pre-Test Passenger Knee Bolster View	A-21
Photo No. A-22 - Post-Test Passenger Knee Bolster View	A-22
Photo No. A-23 - Pre-Test Driver Seat Position View	A-23
Photo No. A-24 - Post-Test Driver Seat Position View	A-24
Photo No. A-25 - Pre-Test Passenger Seat Position View	A-25
Photo No. A-26 - Post-Test Passenger Seat Position View	A-26
Photo No. A-27 - Vehicle Certification Label	A-27
Photo No. A-28 - FMVSS 110 Label	A-28

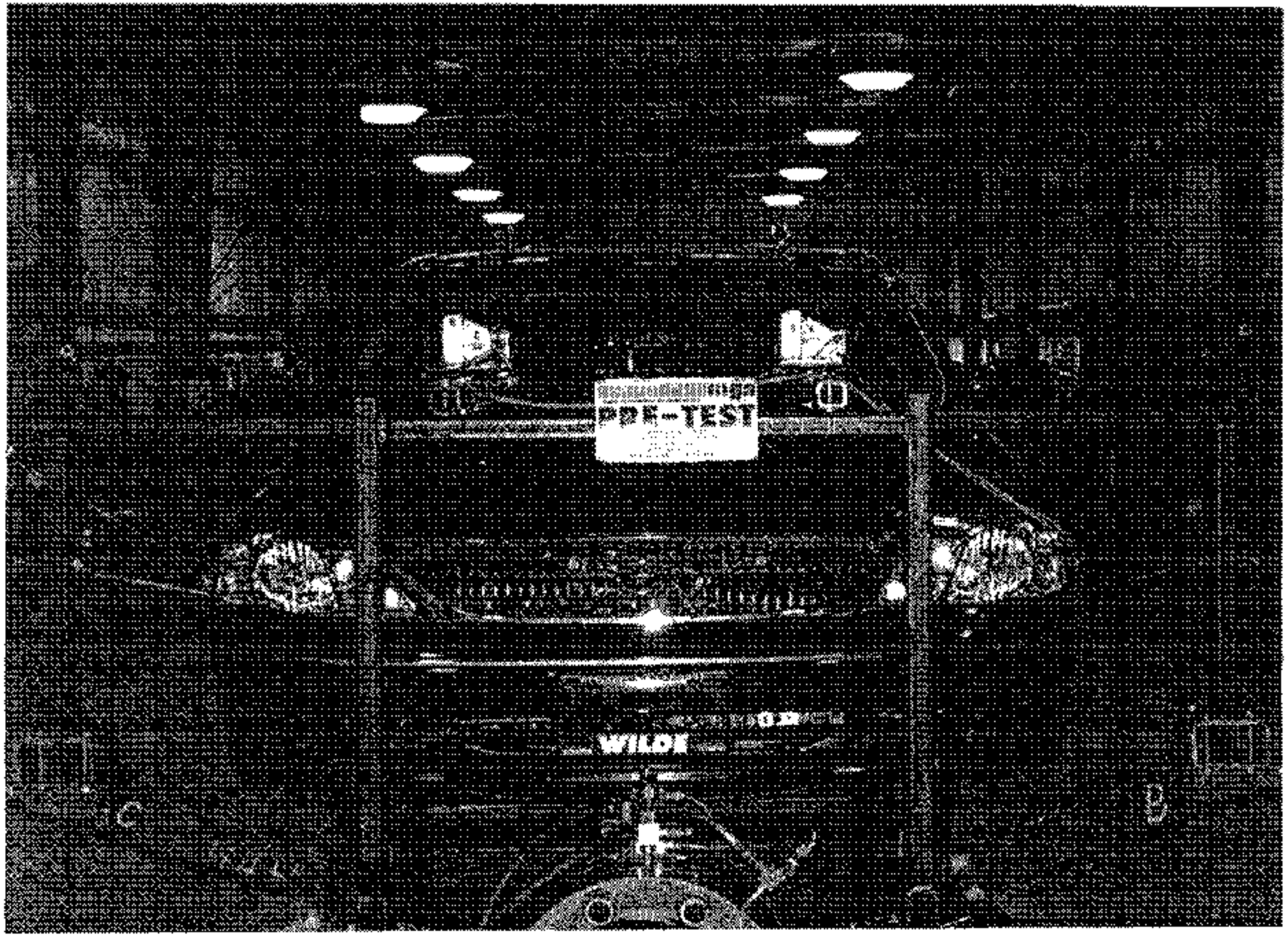

Pre-Test Frontal View

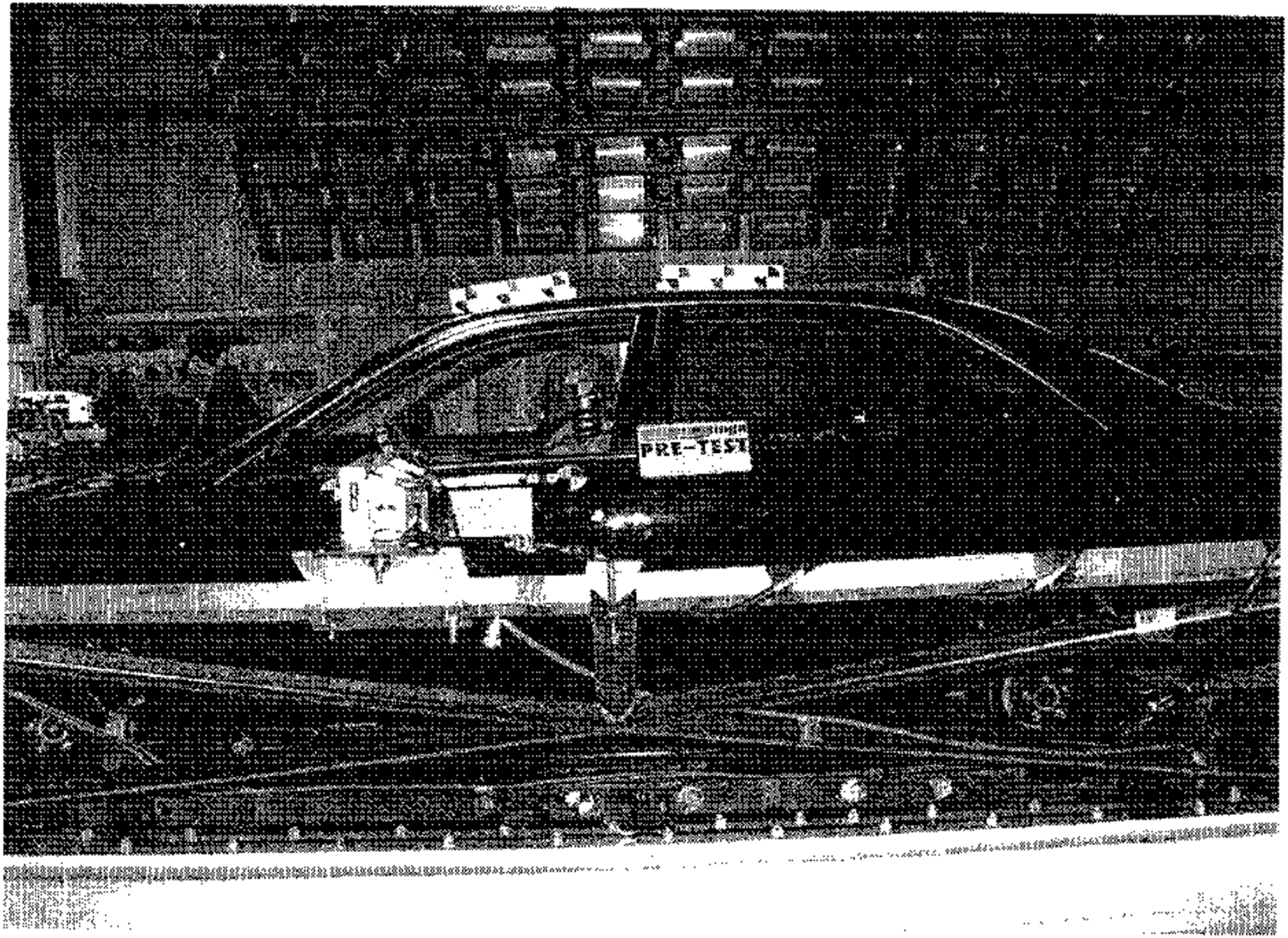

Pre-Test Left Side View

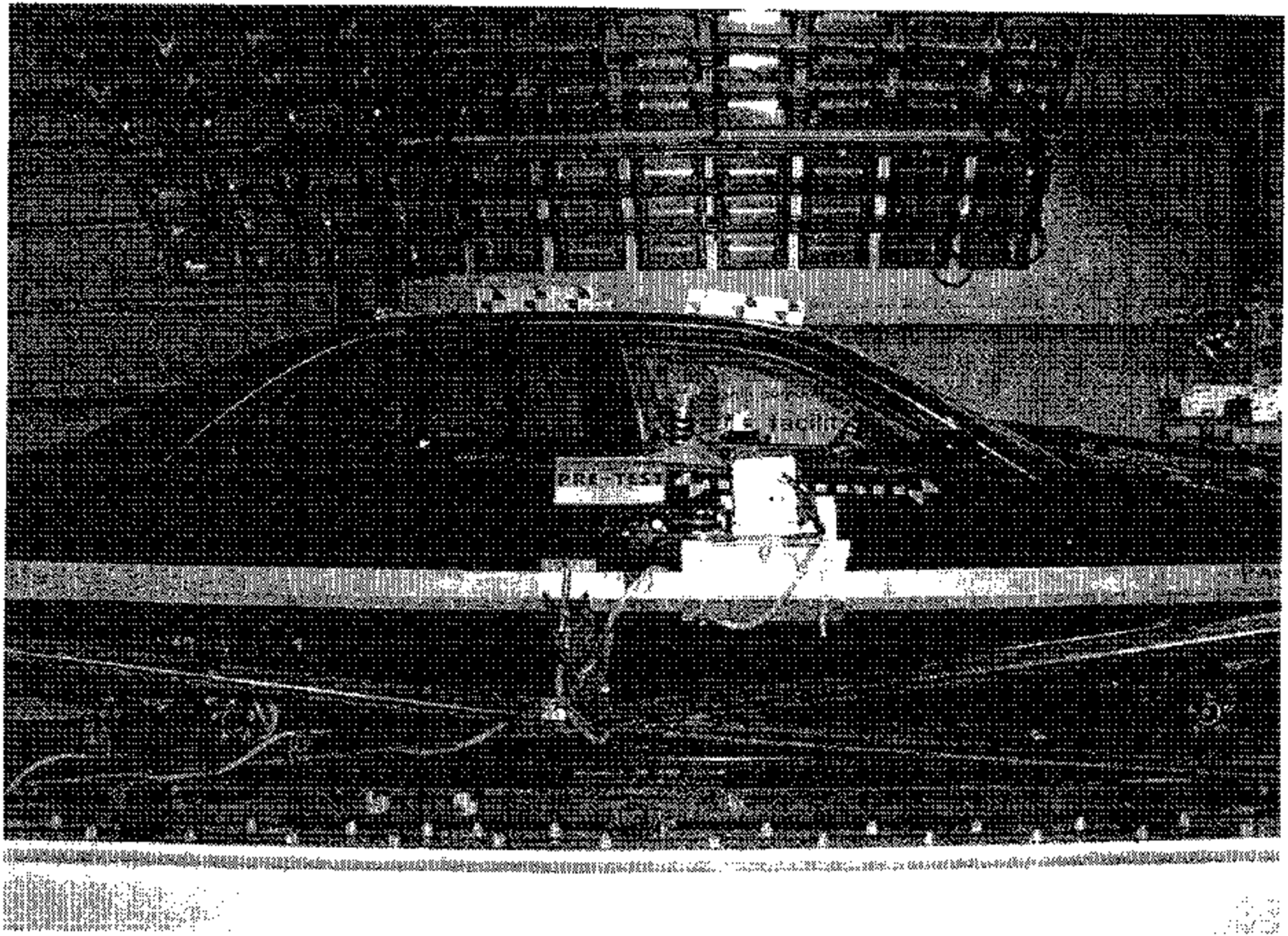

Pre-Test Right Side View

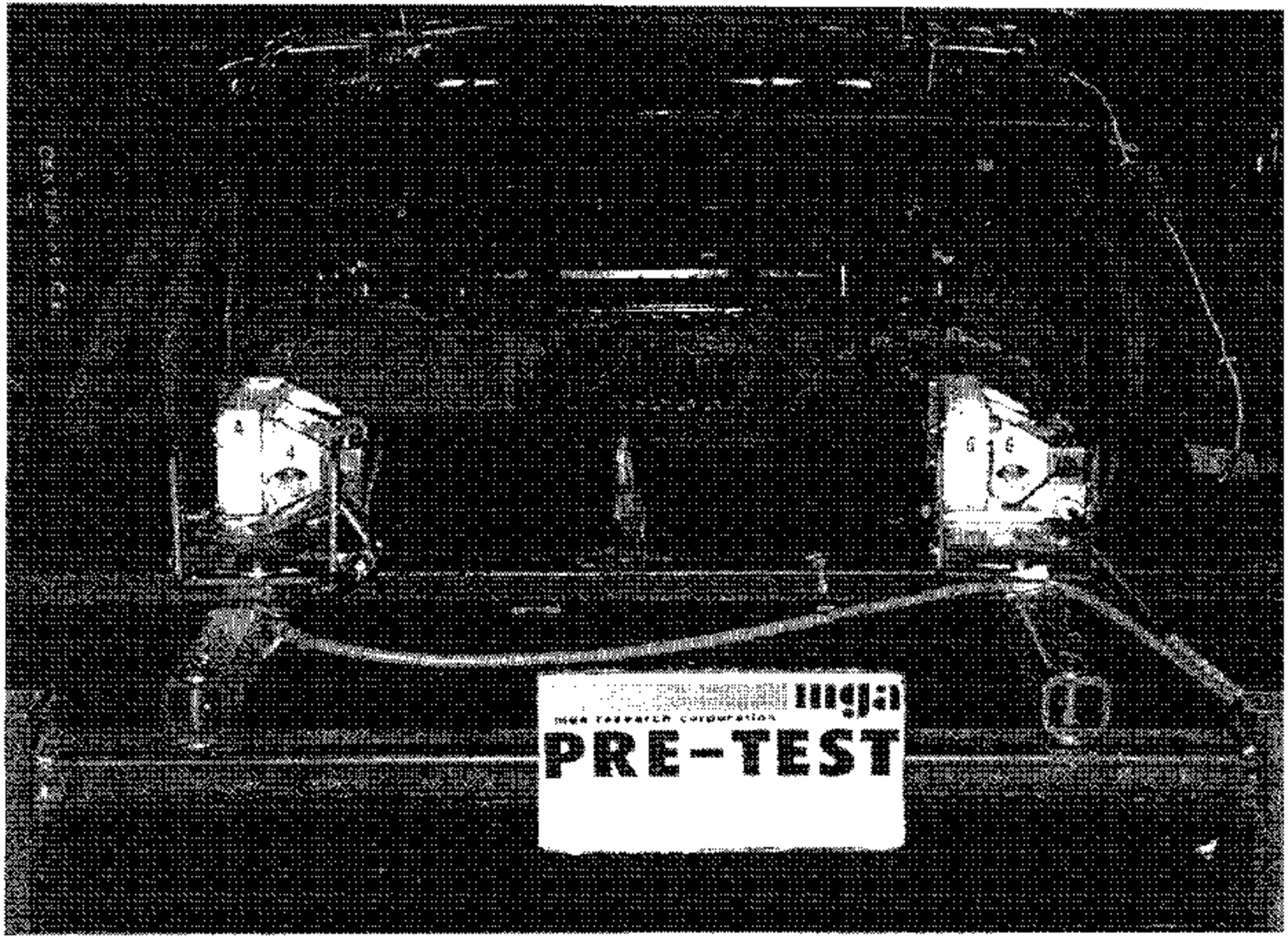

Pre-Test Windshield View

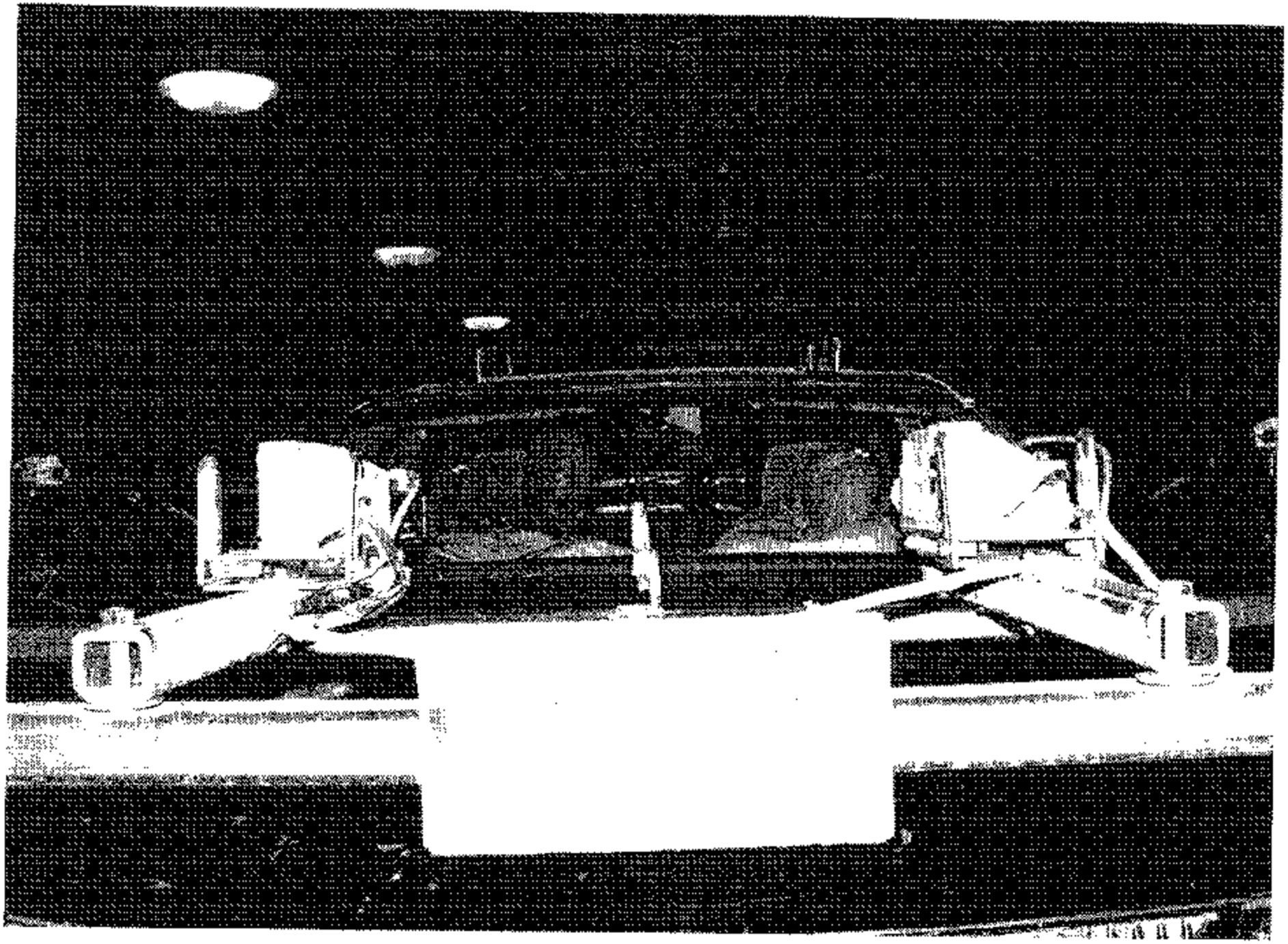

Post-Test Windshield View

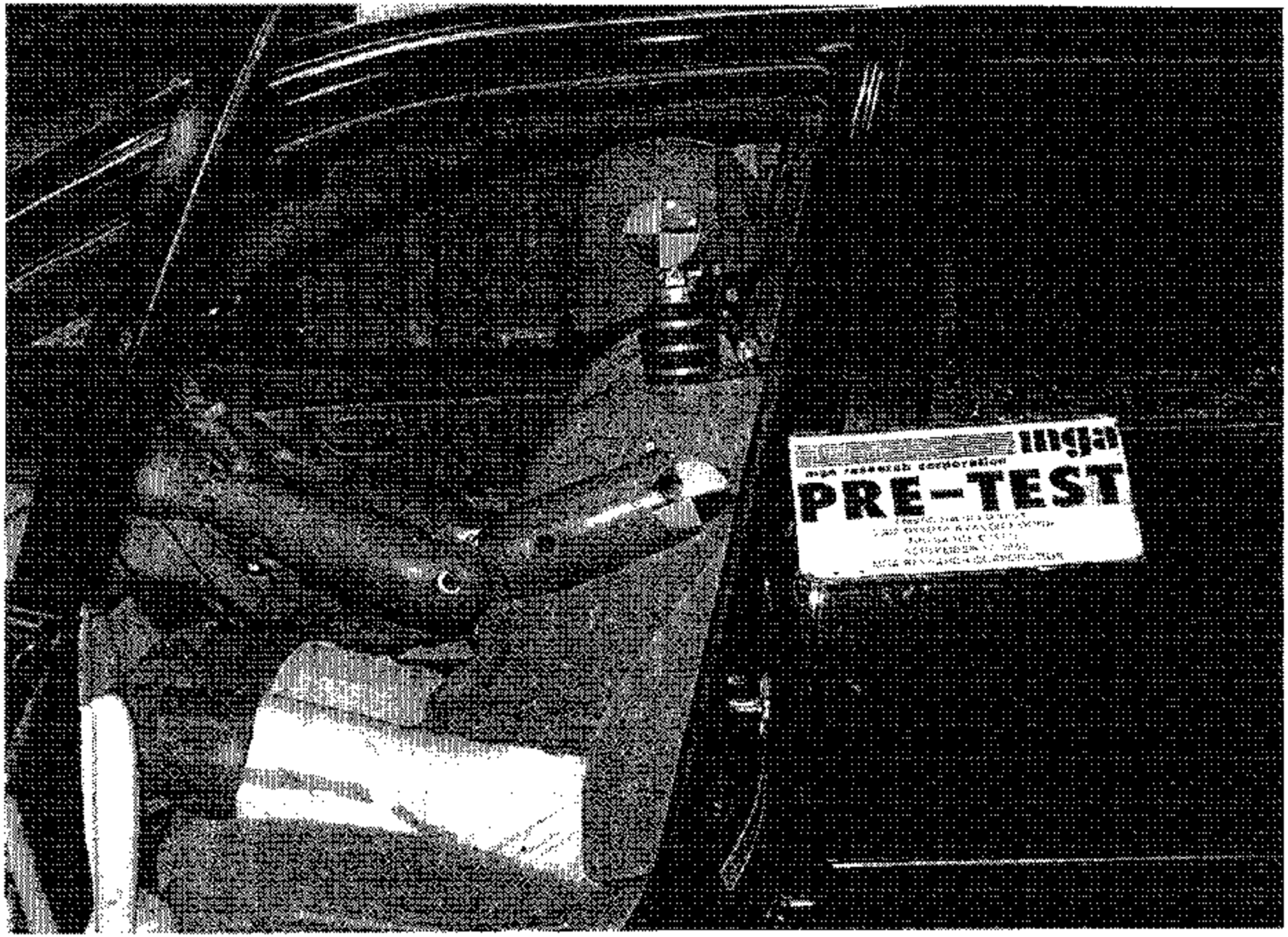

Pre-Test Driver Dummy Position View (Door Open)

Post-Test Driver Dummy Position View (Door Open)

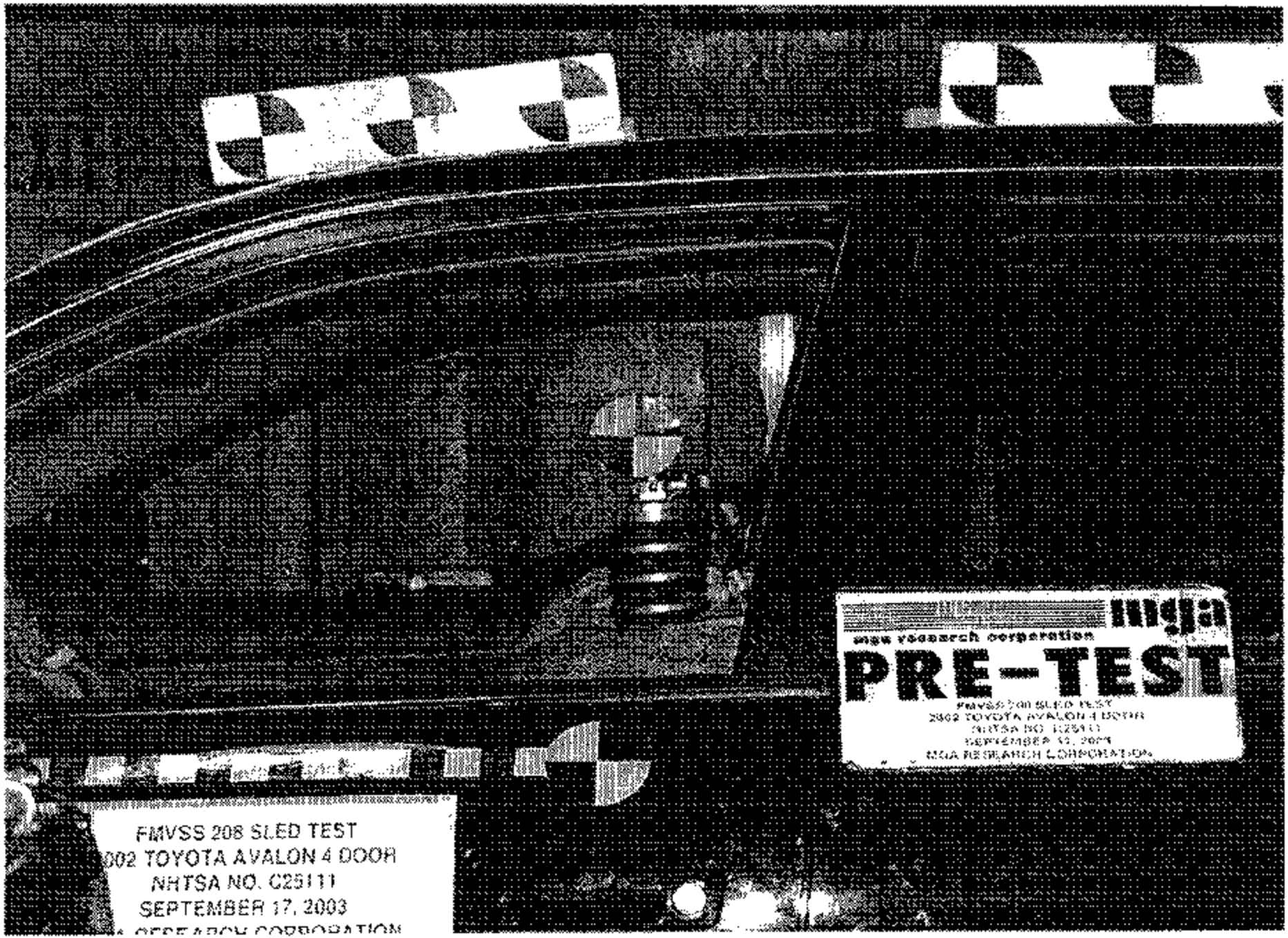

Pre-Test Driver Dummy Position View

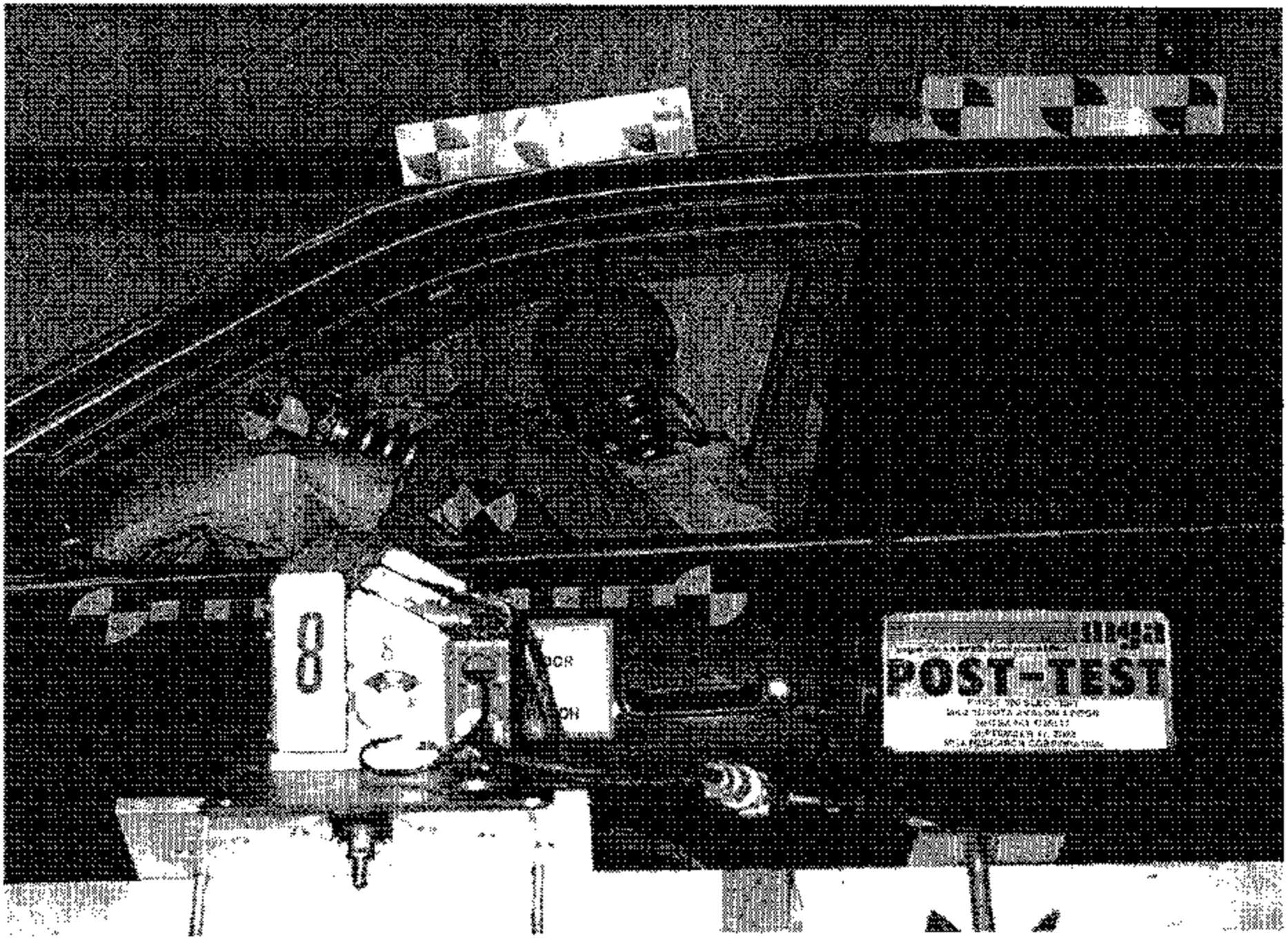

Post-Test Driver Dummy Position View

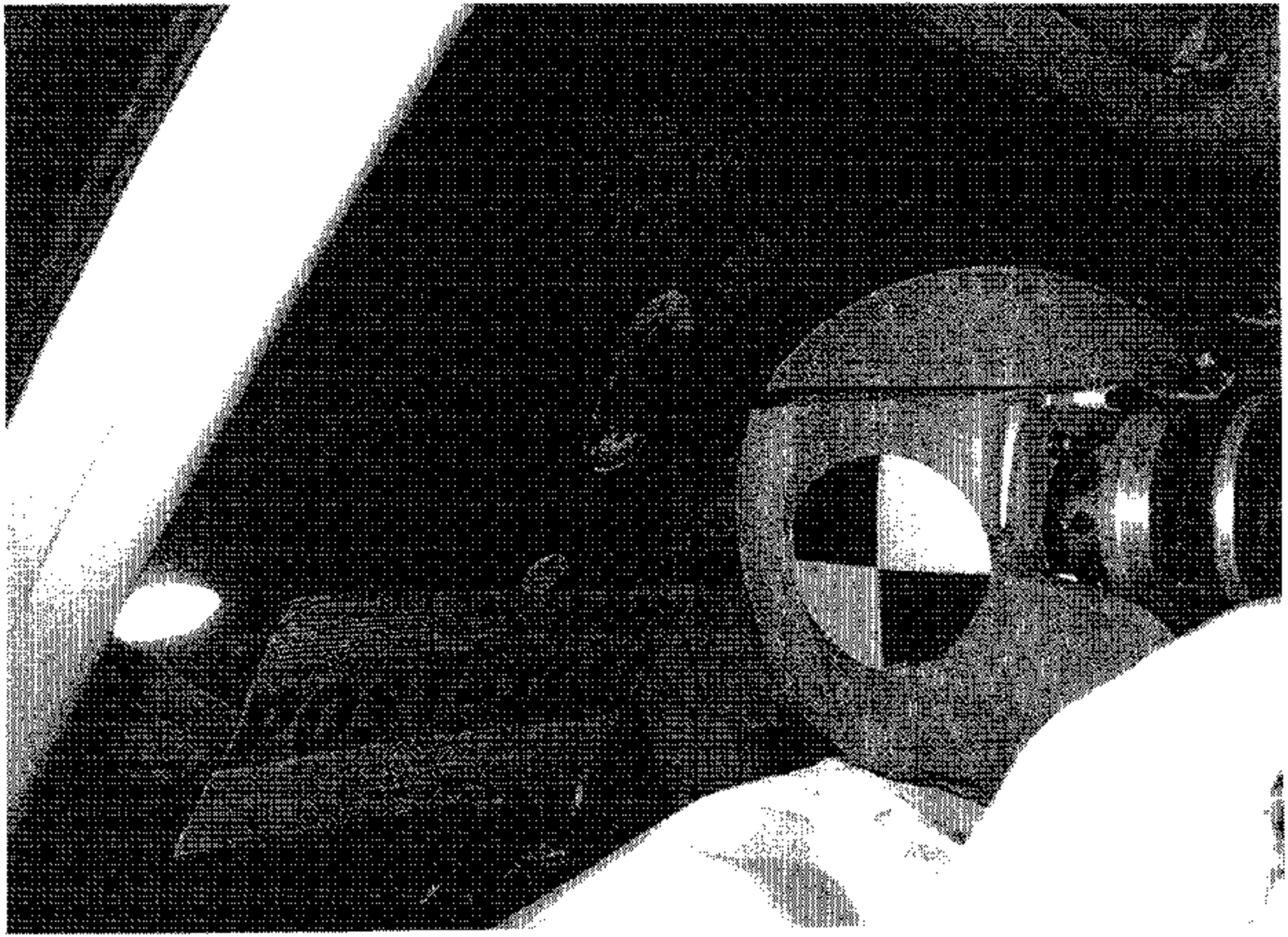

Post-Test Driver Head Contact View (windshield)

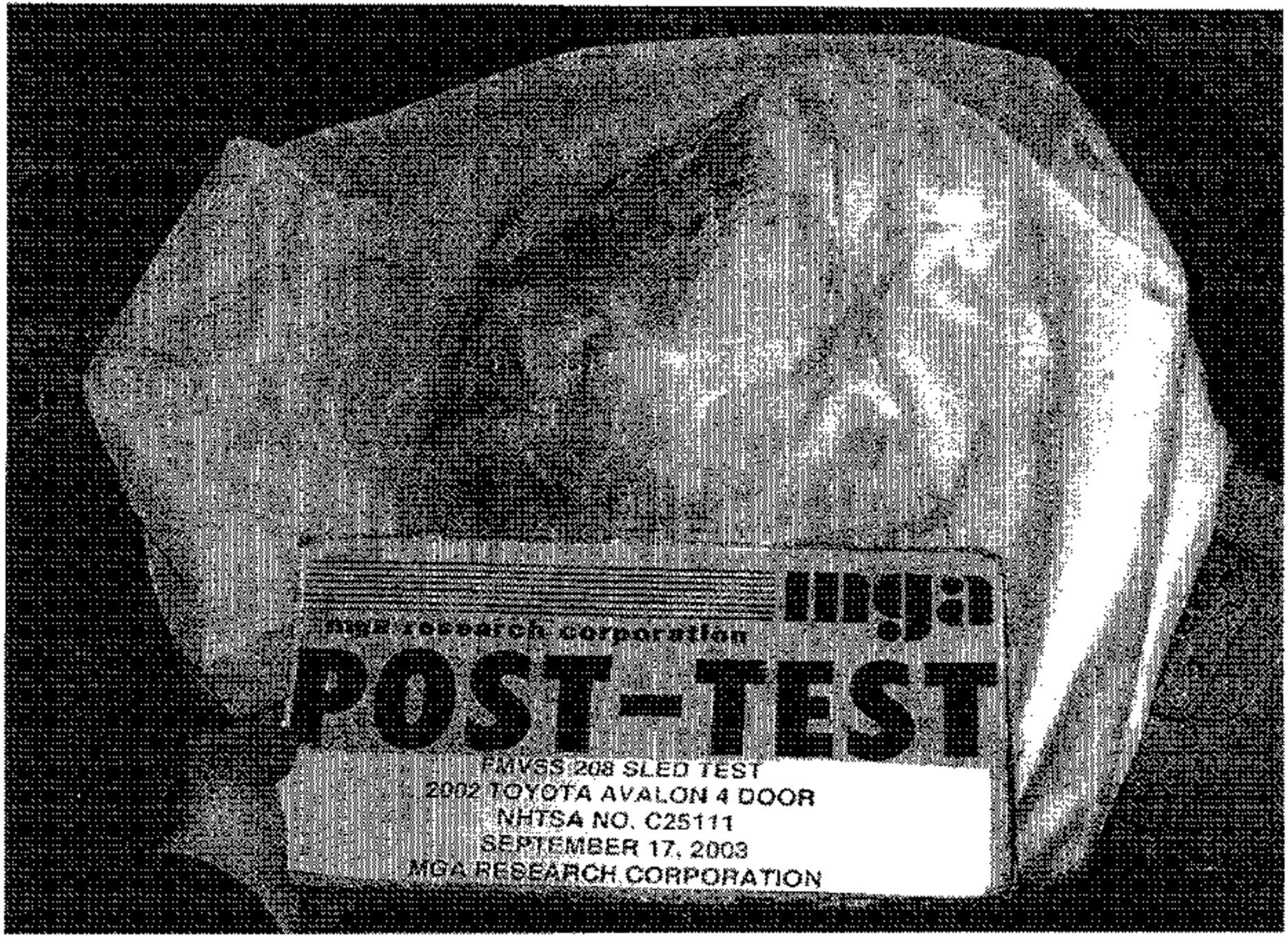

Post-Test Passenger Dummy Airbag View

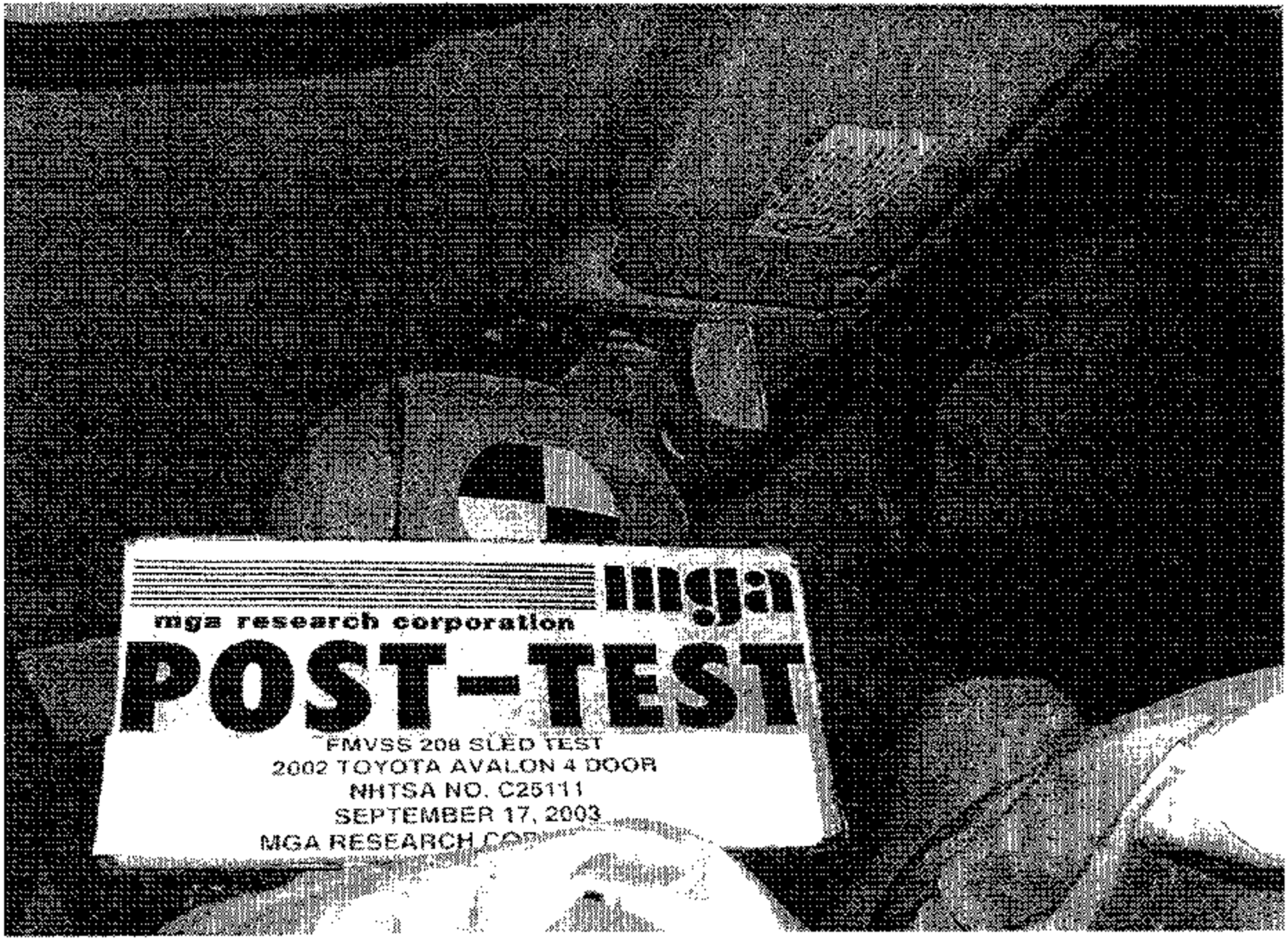

Post-Test Passenger Dummy Head Contact View

Pre-Test Driver Knee Bolster View

Post-Test Driver Knee Bolster View

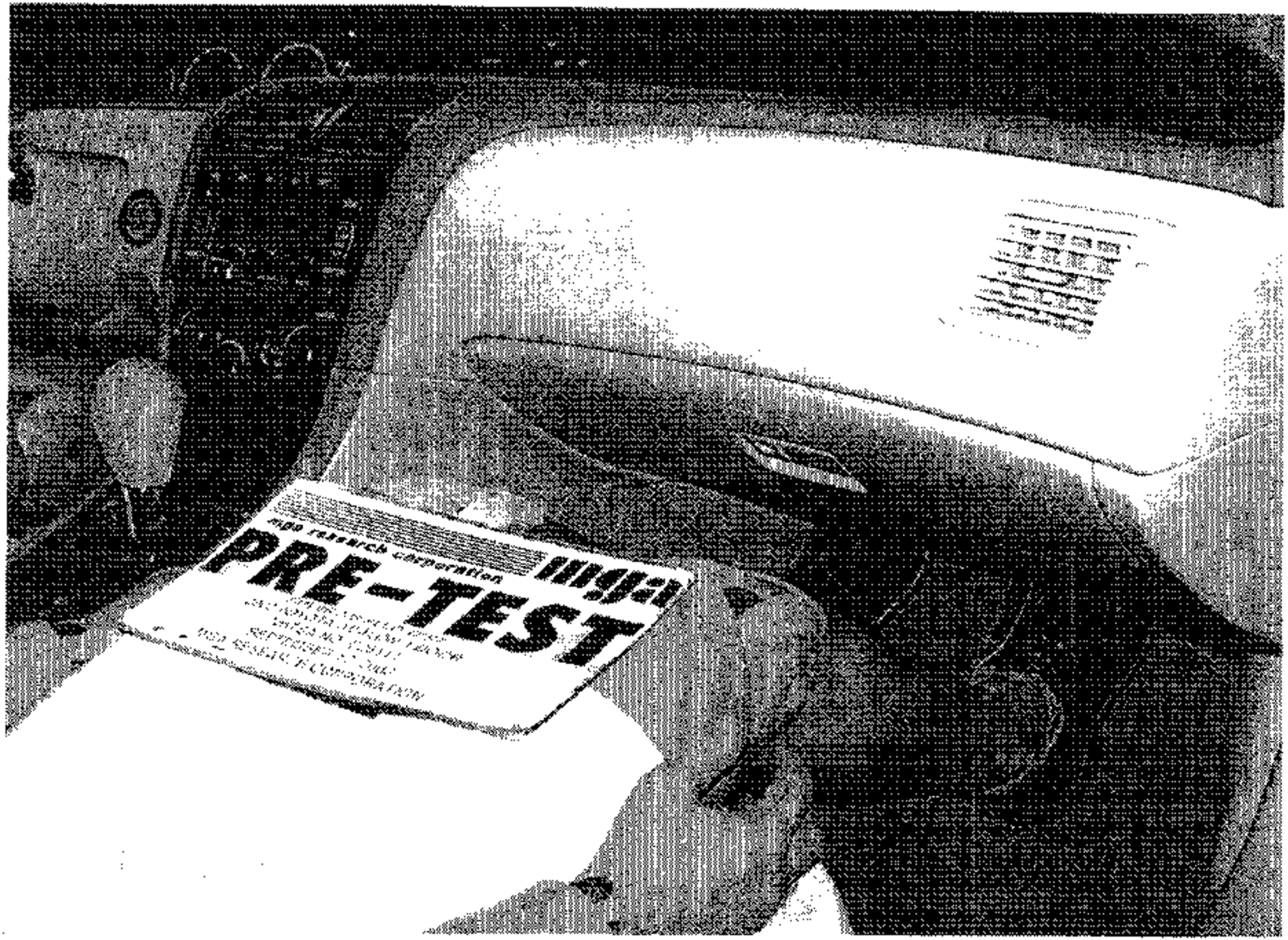

Pre-Test Passenger Knee Bolster View

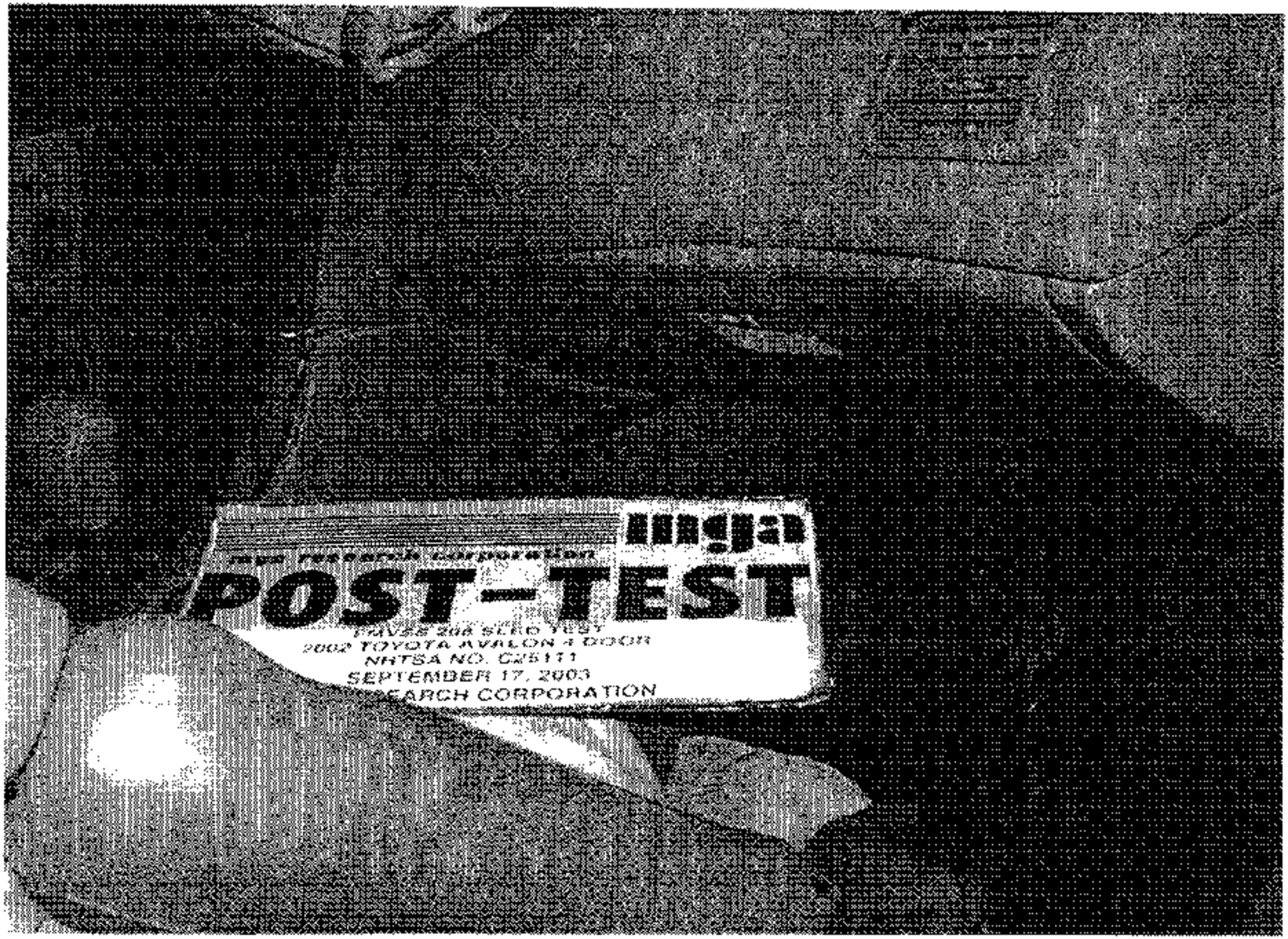

Post-Test Passenger Knee Bolster View

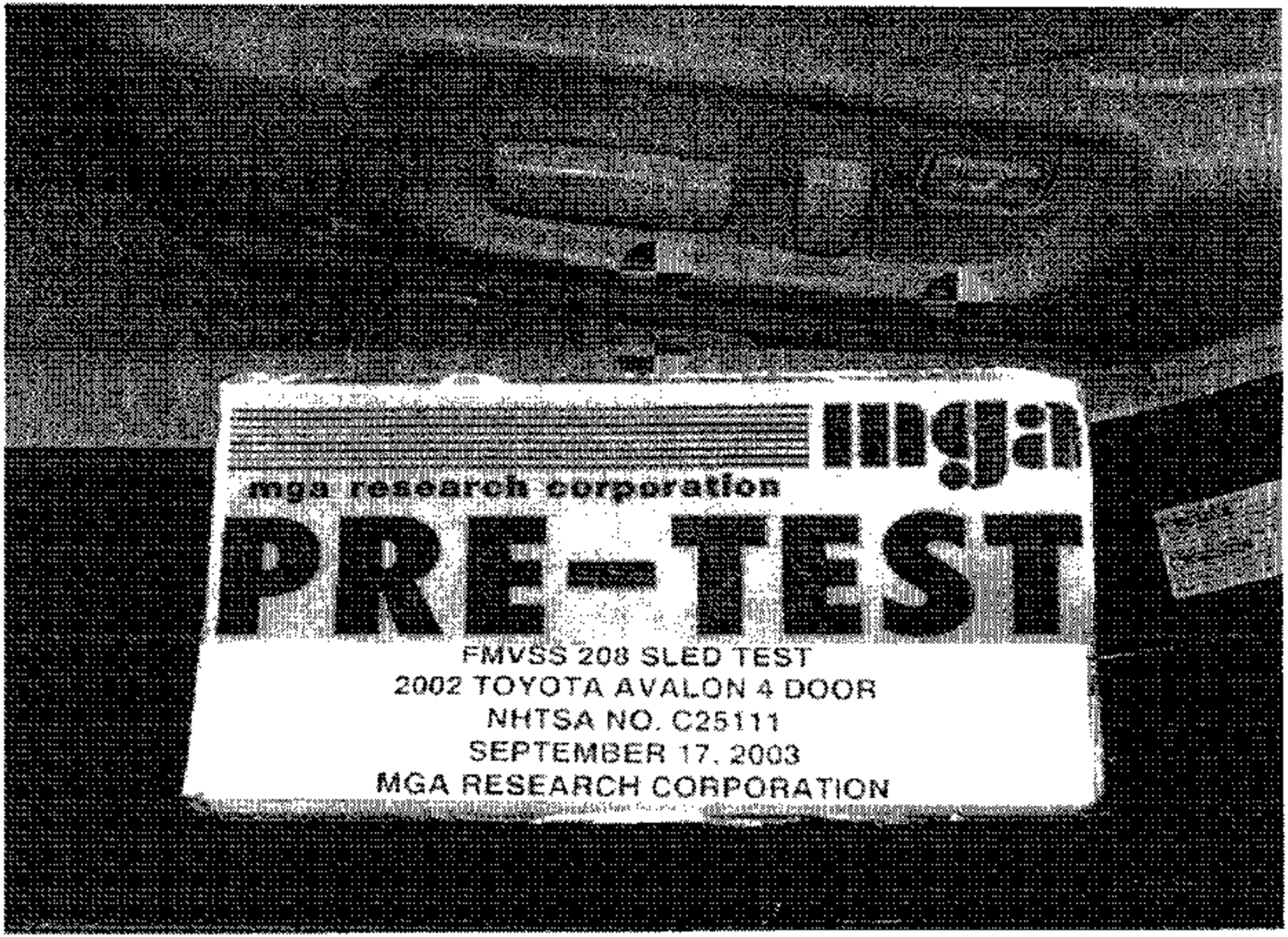

Pre-Test Driver Seat Position View

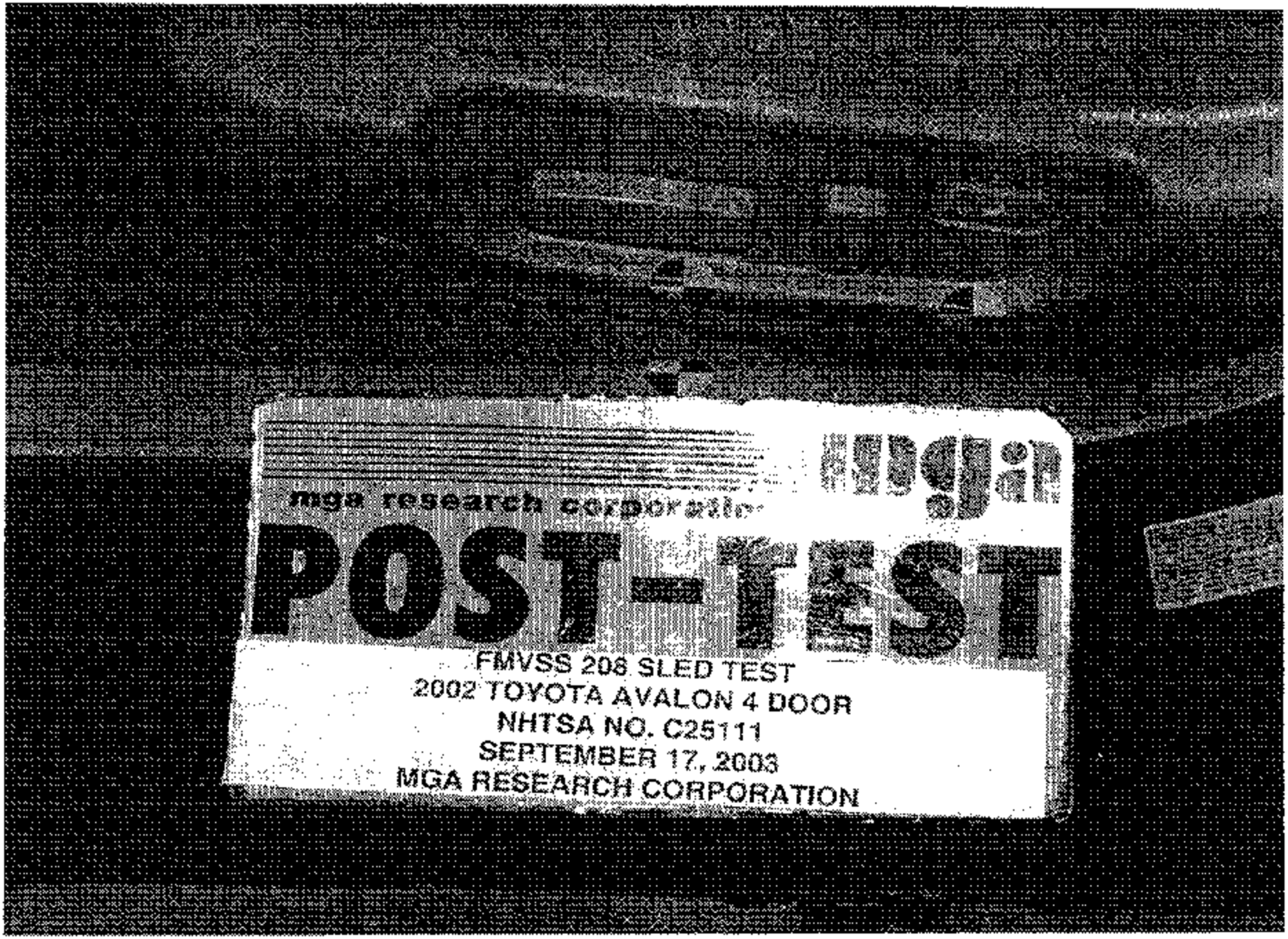

Post-Test Driver Seat Position View

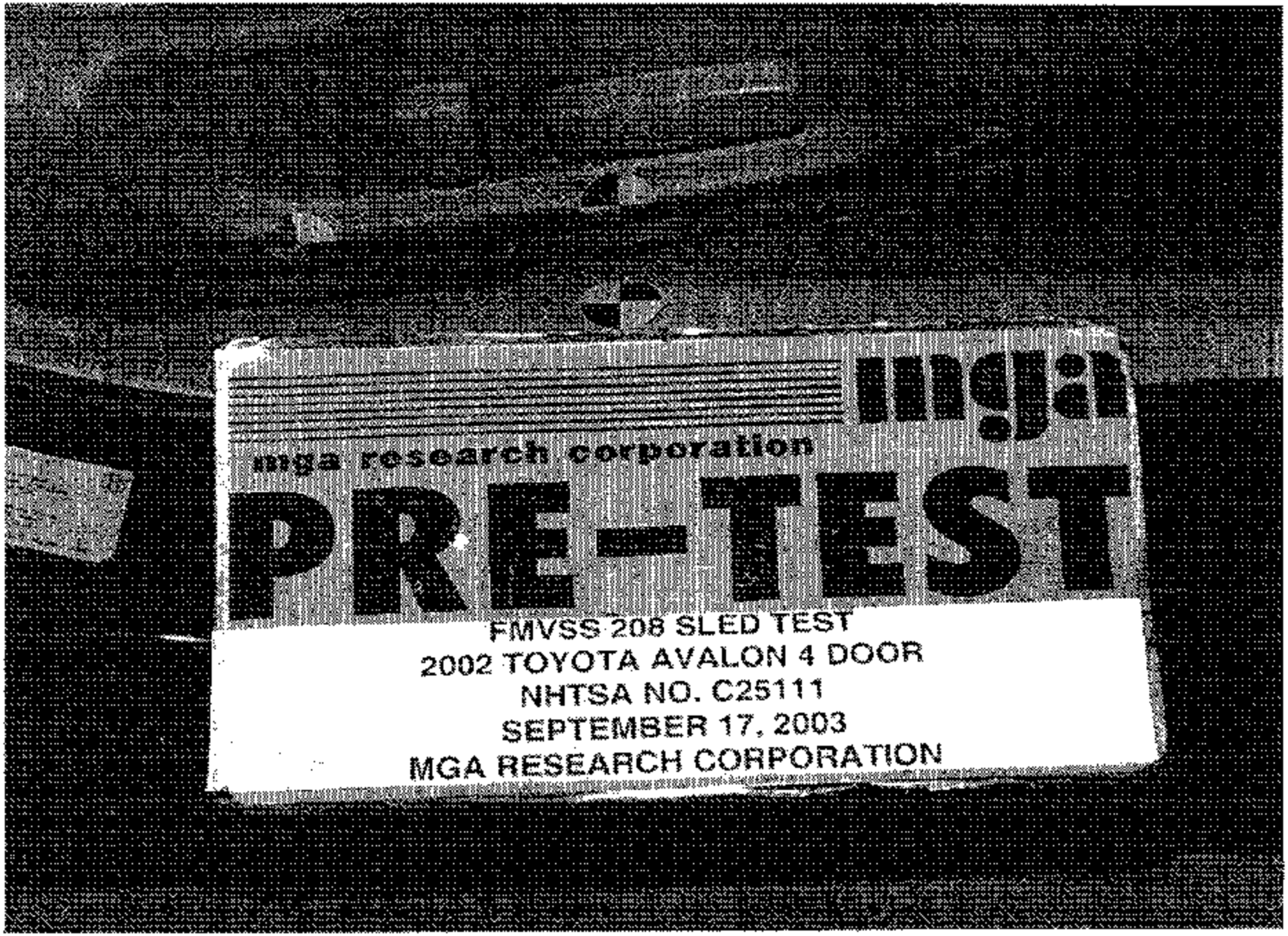

Pre-Test Passenger Seat Position View

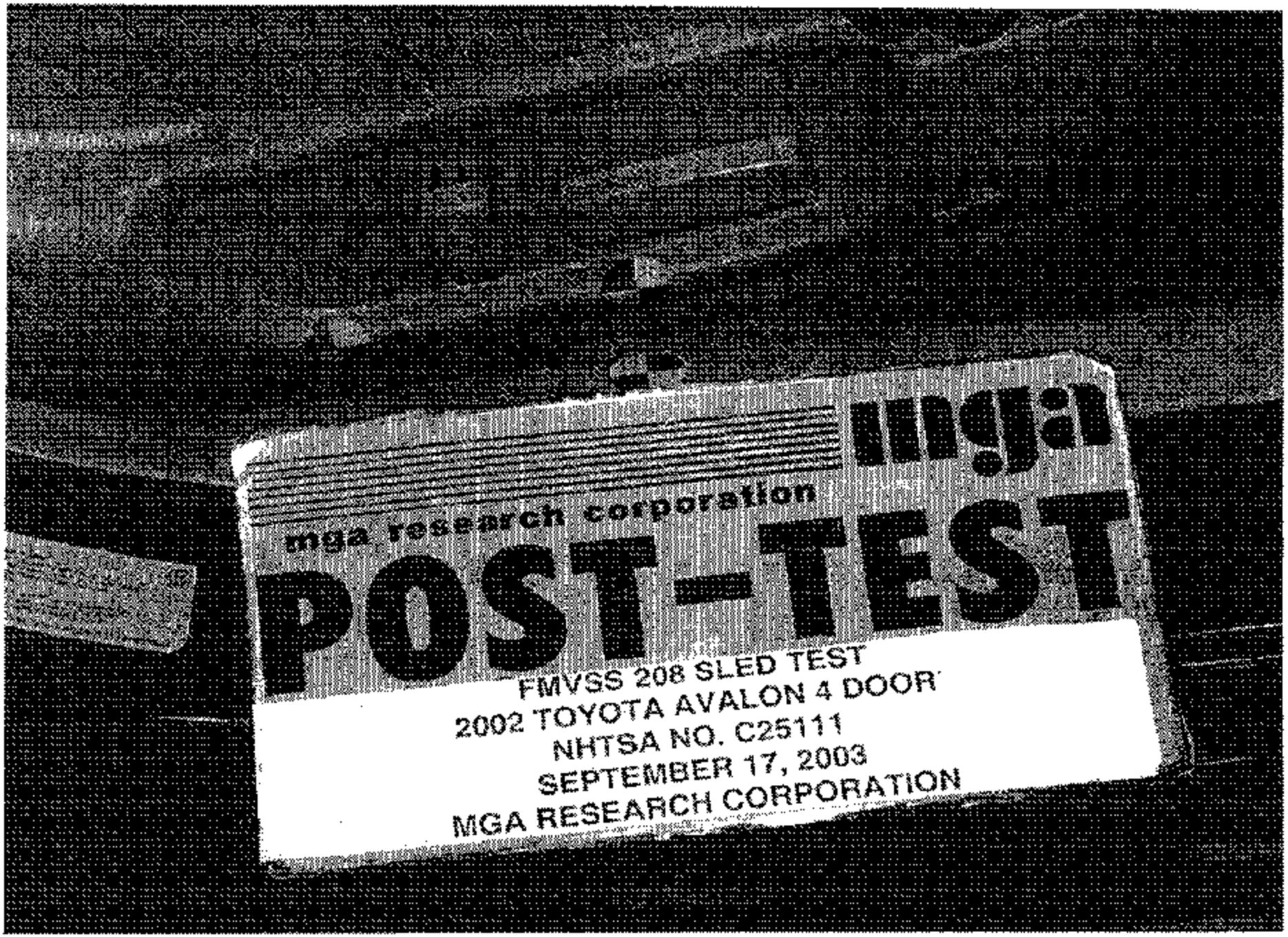

Post-Test Passenger Seat Position View

Vehicle Certification Label

VEHICLE CAPACITY WEIGHT: 410 kg (90[illegible]
OCCUPANT: TOTAL 5 (FRONT 2, REAR 3)
RECOMMENDED COLD TIRE INFLATION PRESSURE : kPa (psi)

TIRE SIZE	P205/65R15 92H	P205/60R16 91H
UP TO 4 OCCUPANTS	Frt 210 (31), Rr 210 (31)	Frt 220 (32), Rr 220 (32)
VEHICLE CAPACITY WEIGHT	Frt 210 (31), Rr 210 (31)	Frt 220 (32), Rr 220 (32)

SEE OWNER'S MANUAL FOR ADDITIONAL INFORMATION

CHARGE MAXIMALE DU VEHICULE: 410 kg (902 LIVRES)
PERSONNES: TOTAL 5 (AVANT 2, ARRIERE 3)
PRESSION DE PNEUS: kPa (LB/PO²)

DIMENSION DES PNEUS	P205/65R15 92H	P205/60R16 91H
AVEC 4 PERSONNES A BORD	AVANT 210 (31), ARRIERE 210 (31)	AVANT 220 (32), ARRIERE 220 (32)
A CHARGE MAXIMALE	AVANT 210 (31), ARRIERE 210 (31)	AVANT 220 (32), ARRIERE 220 (32)

POUR DE PLUS AMPLES DETAILS, VOIR LE MANUEL DU PROPRIETAIRE

07980 2H

FMVSS 110 Label

TABLE OF DATA PLOTS

Description	Page No.
Figure B-1 - Sled X Acceleration vs. Time	B-1
Figure B-2 - Sled X Velocity vs. Time	B-2
Figure B-3 - Sled X Displacement vs. Time	B-3
Figure B-4 - Airbag Timing vs. Time	B-4
Figure B-5 - Left Rear Seat Crossmember X Acceleration vs. Time	B-5
Figure B-6 - Right Rear Seat Crossmember X Acceleration vs. Time	B-6
Figure B-7 - Top of Engine X Acceleration vs. Time	B-7
Figure B-8 - Rear Axle X Acceleration vs. Time	B-8
Figure B-9 - Driver Head X Acceleration vs. Time	B-9
Figure B-10 - Driver Head Y Acceleration vs. Time	B-10
Figure B-11 - Driver Head Z Acceleration vs. Time	B-11
Figure B-12 - Driver Head Resultant Acceleration vs. Time	B-12
Figure B-13 - Driver Neck Force X vs. Time	B-13
Figure B-14 - Driver Neck Force Y vs. Time	B-14
Figure B-15 - Driver Neck Force Z vs. Time	B-15
Figure B-16 - Driver Neck Moment X vs. Time	B-16
Figure B-17 - Driver Neck Moment Y vs. Time	B-17
Figure B-18 - Driver Neck Moment Z vs. Time	B-18
Figure B-19 - Driver Occipital Condyle Moment Y vs. Time	B-19
Figure B-20 - Driver Chest X Acceleration vs. Time	B-20
Figure B-21 - Driver Chest Y Acceleration vs. Time	B-21
Figure B-22 - Driver Chest Z Acceleration vs. Time	B-22
Figure B-23 - Driver Chest Resultant Acceleration vs. Time	B-23
Figure B-24 - Driver Chest Compression vs. Time	B-24
Figure B-25 - Driver Left Femur Force vs. Time	B-25
Figure B-26 - Driver Right Femur Force vs. Time	B-26
Figure B-27 - Passenger Head X Acceleration vs. Time	B-27
Figure B-28 - Passenger Head Y Acceleration vs. Time	B-28
Figure B-29 - Passenger Head Z Acceleration vs. Time	B-29

TABLE OF DATA PLOTS (Cont.)

Description	Page No.
Figure B-30 - Passenger Head Resultant Acceleration vs. Time	B-30
Figure B-31 - Passenger Neck Force X vs. Time	B-31
Figure B-32 - Passenger Neck Force Y vs. Time	B-32
Figure B-33 - Passenger Neck Force Z vs. Time	B-33
Figure B-34 - Passenger Neck Moment X vs. Time	B-34
Figure B-35 - Passenger Neck Moment Y vs. Time	B-35
Figure B-36 - Passenger Neck Moment Z vs. Time	B-36
Figure B-37 - Passenger Occipital Condyle Moment Y vs. Time	B-37
Figure B-38 - Passenger Chest X Acceleration vs. Time	B-38
Figure B-39 - Passenger Chest Y Acceleration vs. Time	B-39
Figure B-40 - Passenger Chest Z Acceleration vs. Time	B-40
Figure B-41 - Passenger Chest Resultant Acceleration vs. Time	B-41
Figure B-42 - Passenger Chest Compression vs. Time	B-42
Figure B-43 - Passenger Left Femur Force vs. Time	B-43
Figure B-44 - Passenger Right Femur Force vs. Time	B-44

Test Desc: **FMVSS 208 SLED**

Component: **2002 TOYOTA AVALON 4 DOOR (C25111)**

TestNumber: **H03432**

Test Date: **09/17/03**

Chn Name: **SLED X ACCELERATION**

CFC: **60**

File Name: **H03432AF.A01**

Sensor S/N:**764077**

MGA Research Corp
Accelerator Sled Facility
5000 Warren Road,
Burlington, WI 53105
Ph #: 262-763-2705
Fax #: 262-763-0934

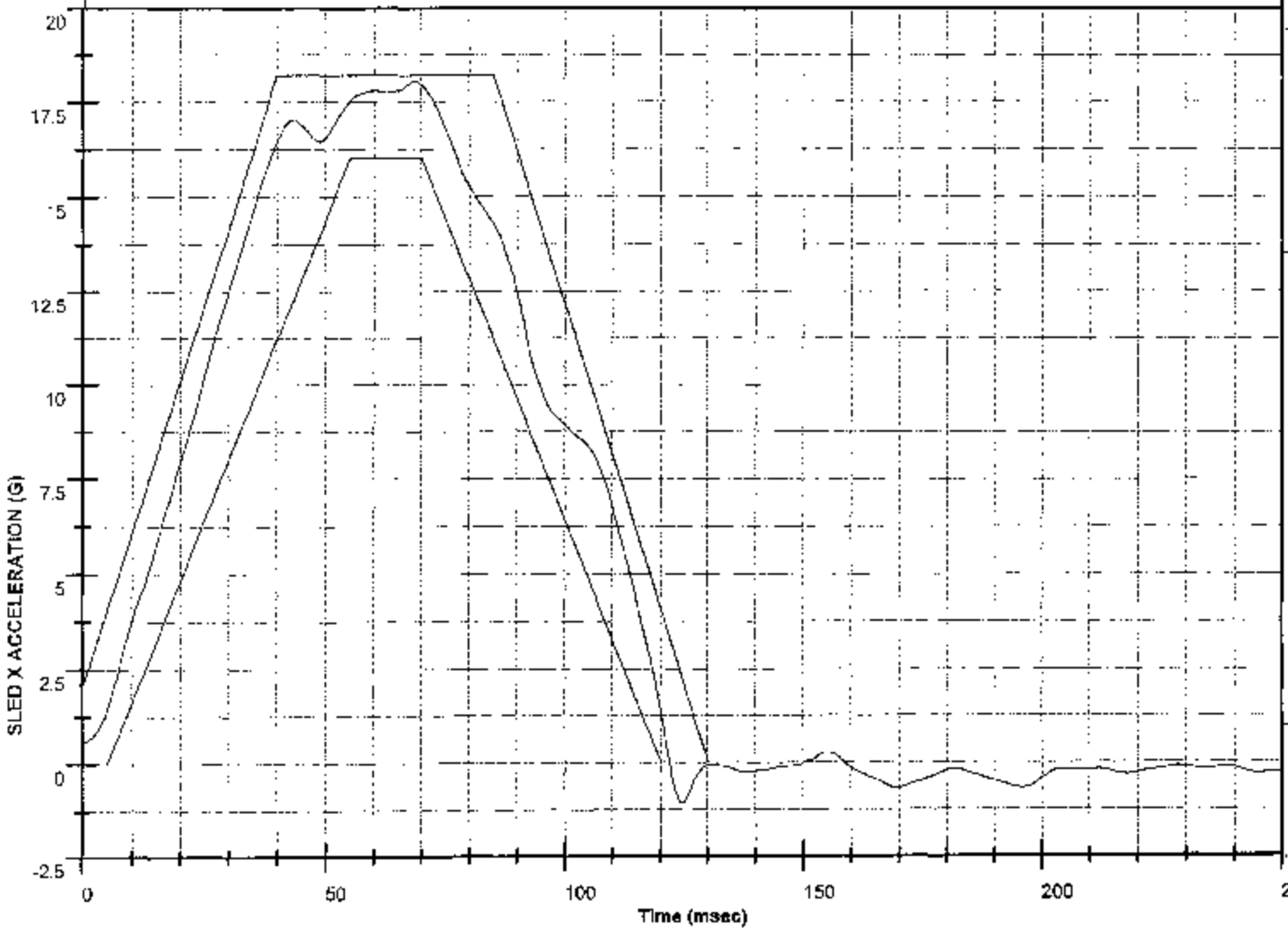

Maximum: **18.0 G**
Time: **68.6 msec**

Minimum: **-1.1 G**
Time: **124.6 msec**

Value at T0: **0.6 G**

Plotted By: **C. Gadberry**
On: **09.24.2003 21:10:59**

Test Desc: FMVSS 208 SLED

Component: 2002 TOYOTA AVALON 4 DOOR (C25111)

TestNumber: H03432

Test Date: 09/17/03

Chn Name: SLED X VELOCITY

CFC: 180

File Name: H03432AI.V01

Sensor S/N:764077

MGA Research Corp
Accelerator Sled Facility
5000 Warren Road,
Burlington, WI 53105
Ph #: 262-763-2705
Fax #: 262-763-0934

Maximum: 30.2 MPH
Time: 121.8 msec

Minimum: 0.0 MPH
Time: 0.0 msec

Value at T0: 0.0 MPH

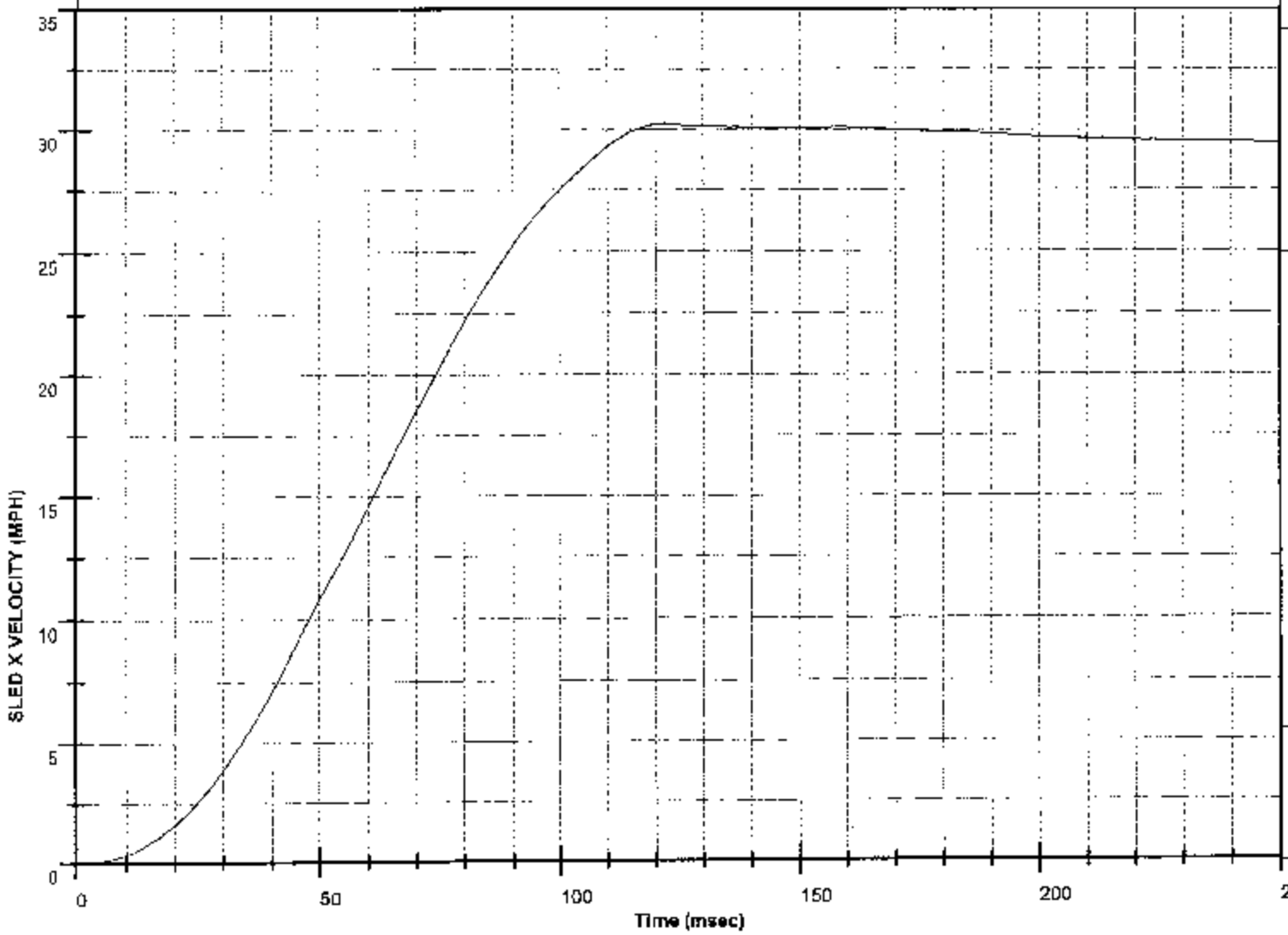

Plotted By: C. Gadberry

On: 09.24.2003 21:11:03

Test Desc: FMVSS 208 SLED

Component: 2002 TOYOTA AVALON 4 DOOR (C25111)

TestNumber: H03432

Test Date: 09/17/03

Chn Name: SLED X DISPLACEMENT

CFC: 180

File Name: H03432AI.D01

Sensor S/N: 764077

MGA Research Corp
Accelerator Sled Facility
5000 Warren Road,
Burlington, WI 53105
Ph #: 262-763-2705
Fax #: 262-763-0934

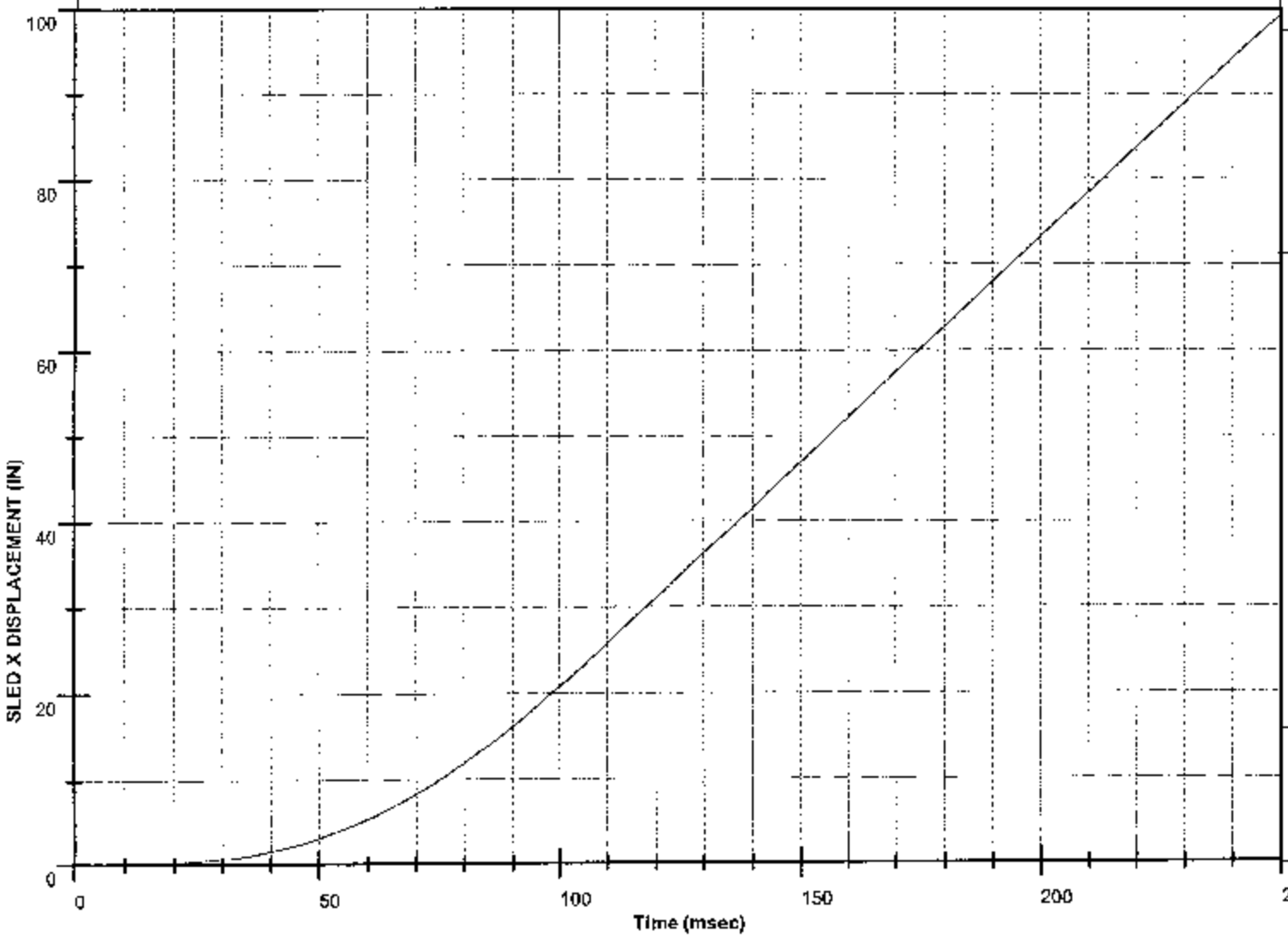

Maximum: 99.2 IN
Time: 249.9 msec

Minimum: 0.0 IN
Time: 0.0 msec

Value at T0: 0.0 IN

Plotted By: C. Gadberry

On: 09.24.2003 21:11:05

Test Desc: FMVSS 208 SLED

Component: 2002 TOYOTA AVALON 4 DOOR (C25111)

TestNumber: H03432

Test Date: 09/17/03

Chn Name: AIRBAG VOLTAGE

CFC: 1000

File Name: H03432OT.O47

Sensor S/N:N/A

MGA Research Corp
Accelerator Sled Facility
5000 Warren Road,
Burlington, WI 53105
Ph #: 262-763-2705
Fax #: 262-763-0934

Maximum: 20.0 V
Time: 22.4 msec

Minimum:-1.1 V
Time: 2.3 msec

Value at T0: -0.8 V

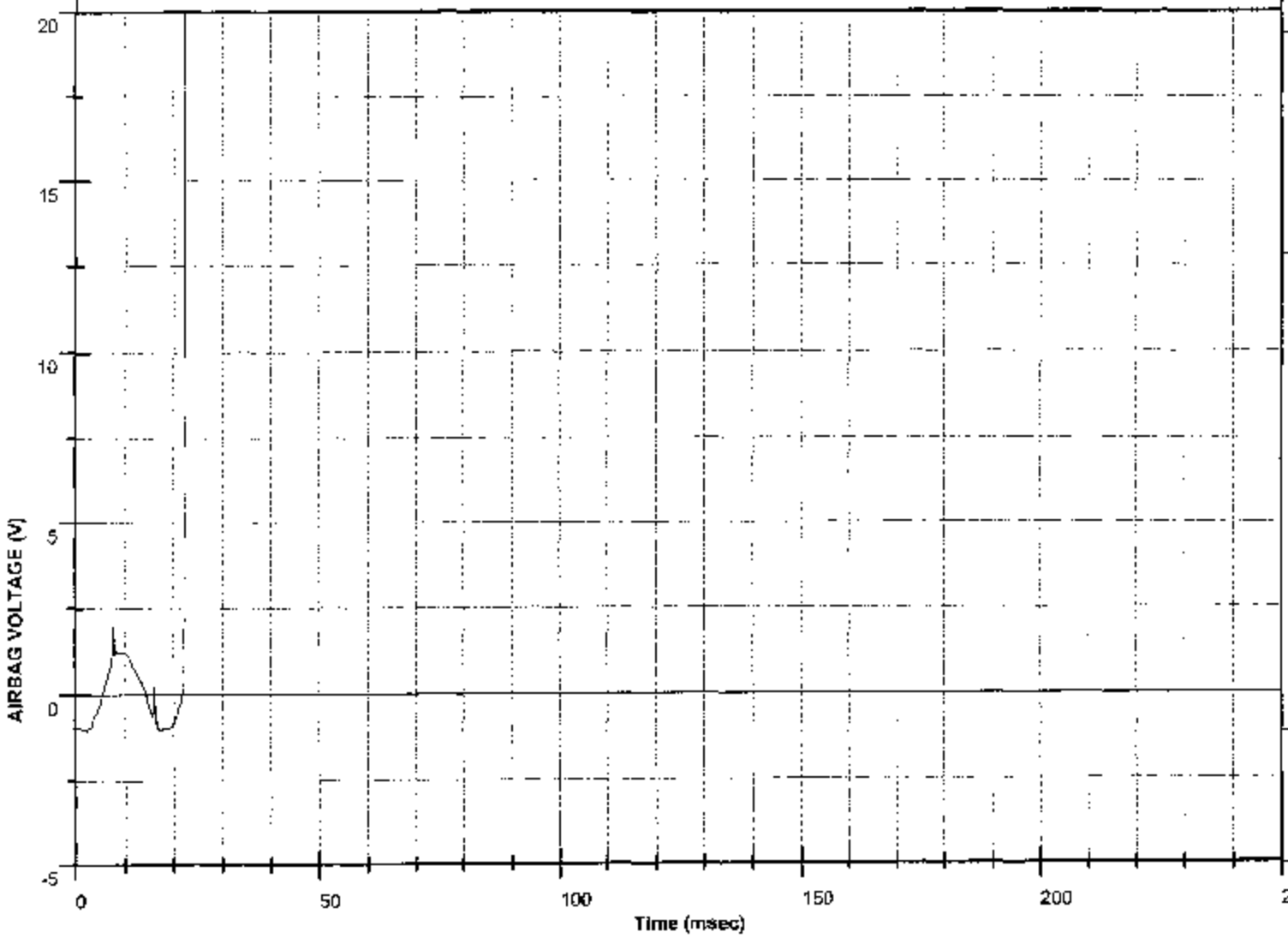

Plotted By: C. Gadberry

On: 09.24.2003 21:12:26

Test Desc: **FMVSS 208 SLED**

Component: **2002 TOYOTA AVALON 4 DOOR (C25111)**

TestNumber: **H03432**

Test Date: **09/17/03**

Chn Name: **LEFT REAR CROSSMEMBER X**

CFC: **60**

File Name: **H03432AF.A44**

Sensor S/N: **G01-NO1**

MGA Research Corp
Accelerator Sled Facility
5000 Warren Road,
Burlington, WI 53105
Ph #: 262-763-2705
Fax #: 262-763-0934

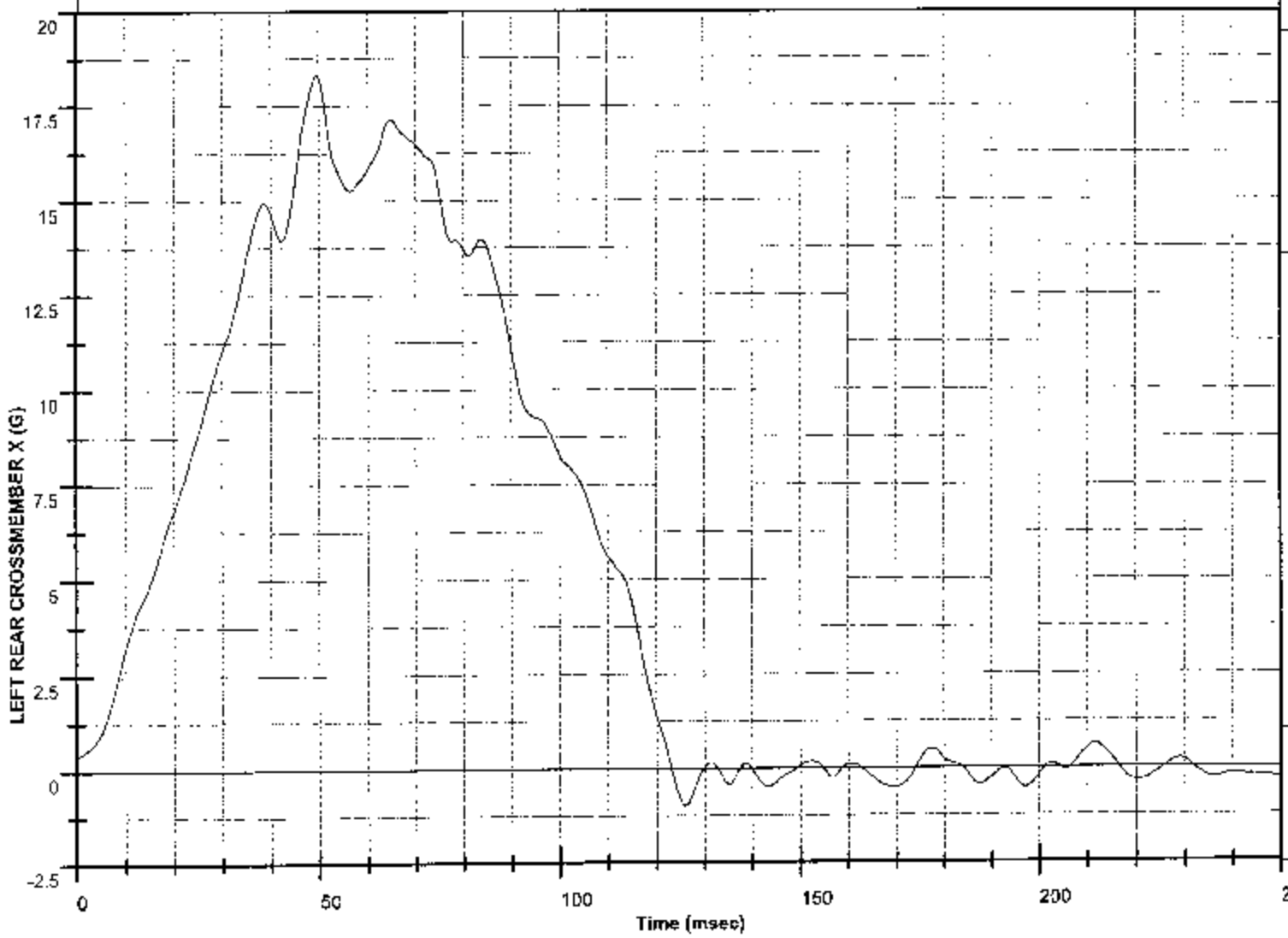

Maximum: **18.3 G**
Time: **49.6 msec**

Minimum: **-1.0 G**
Time: **125.9 msec**

Value at T0: **0.4 G**

Plotted By: **C. Gadberry**

On: **09.24.2003 21:12:22**

Test Desc: **FMVSS 208 SLED**

Component: **2002 TOYOTA AVALON 4 DOOR (C25111)**

TestNumber: **H03432**

Test Date: **09/17/03**

Chn Name: **RIGHT REAR CROSSMEMBER X**

CFC: **60**

File Name: **H03432AF.A45**

Sensor S/N:**A08-M05**

MGA Research Corp
Accelerator Sled Facility
5000 Warren Road,
Burlington, WI 53105
Ph #: 262-763-2705
Fax #: 262-763-0934

Maximum: **18.7 G**
Time: **49.7 msec**

Minimum:**-1.0 G**
Time: **125.7 msec**

Value at T0: **0.5 G**

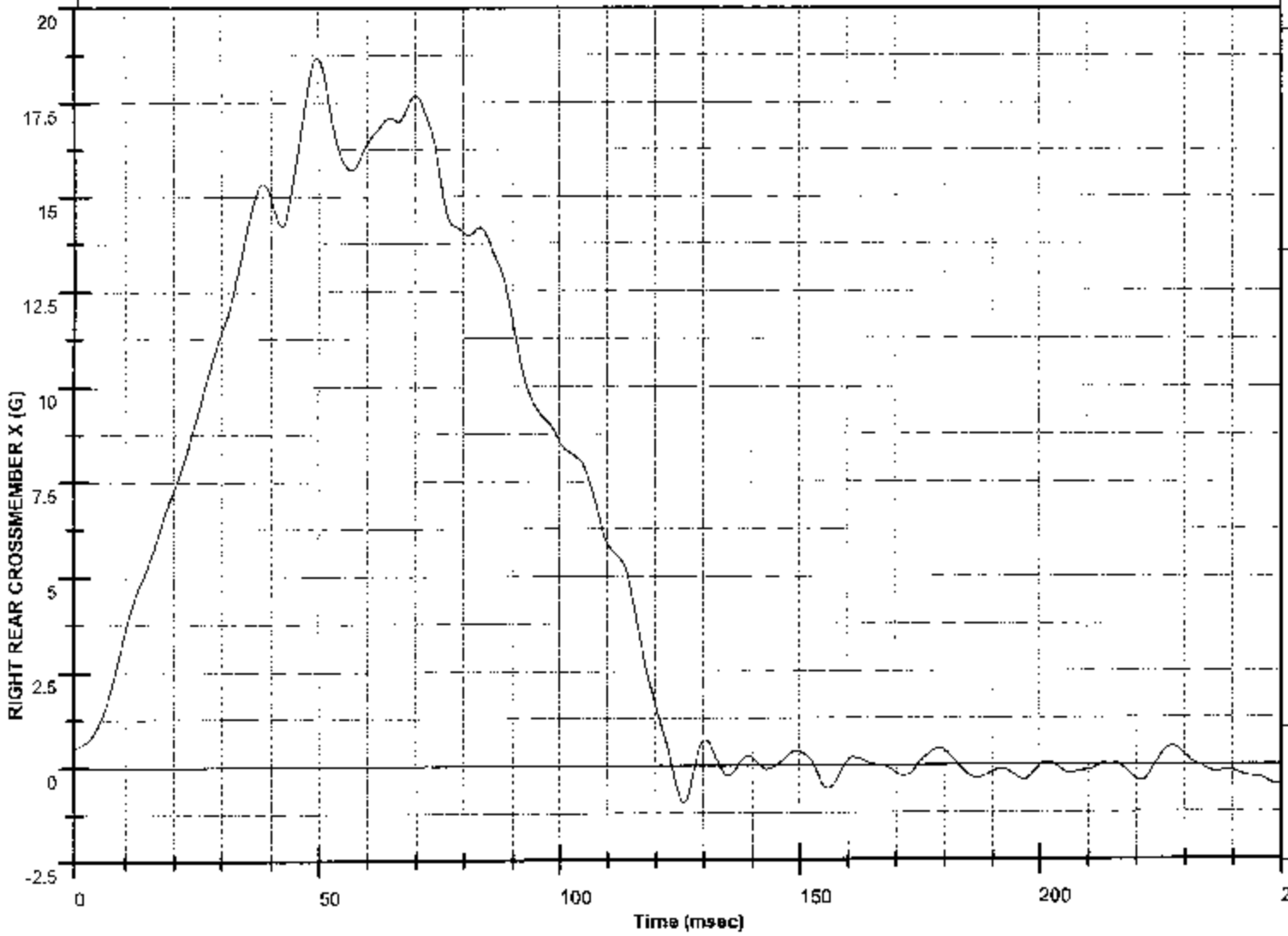

Plotted By: **C. Gadberry**

On: **09.24.2003 21:15:46**

Test Desc: FMVSS 208 SLED

Component: 2002 TOYOTA AVALON 4 DOOR (C25111)

TestNumber: H03432

Test Date: 09/17/03

Chn Name: TOP OF ENGINE X

CFC: 60

File Name: H03432AF.A18

Sensor S/N:99F159

MGA Research Corp
Accelerator Sled Facility
5000 Warren Road,
Burlington, WI 53105
Ph #: 262-763-2705
Fax #: 262-763-0934

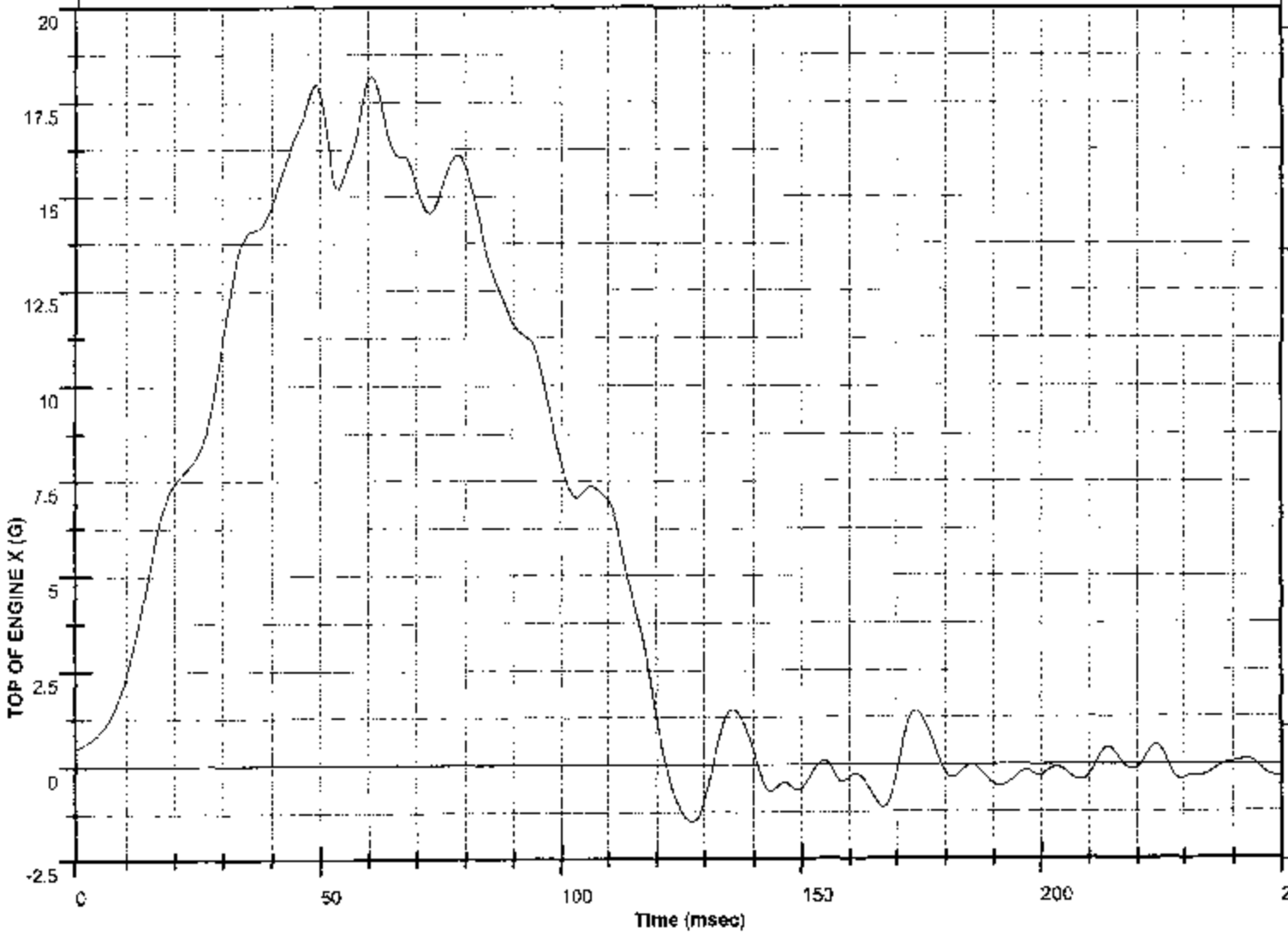

Maximum: 18.2 G
Time: 60.7 msec

Minimum: -1.5 G
Time: 127.4 msec

Value at T0: 0.5 G

Plotted By: C. Gadberry

On: 09.24.2003 21:12:18

Test Desc: FMVSS 208 SLED

Component: 2002 TOYOTA AVALON 4 DOOR (C25111)

TestNumber: H03432

Test Date: 09/17/03

Chn Name: REAR AXLE X

CFC: 60

File Name: H03432AF.A43

Sensor S/N: A08-M09

MGA Research Corp
Accelerator Sled Facility
5000 Warren Road,
Burlington, WI 53105
Ph #: 262-763-2705
Fax #: 262-763-0934

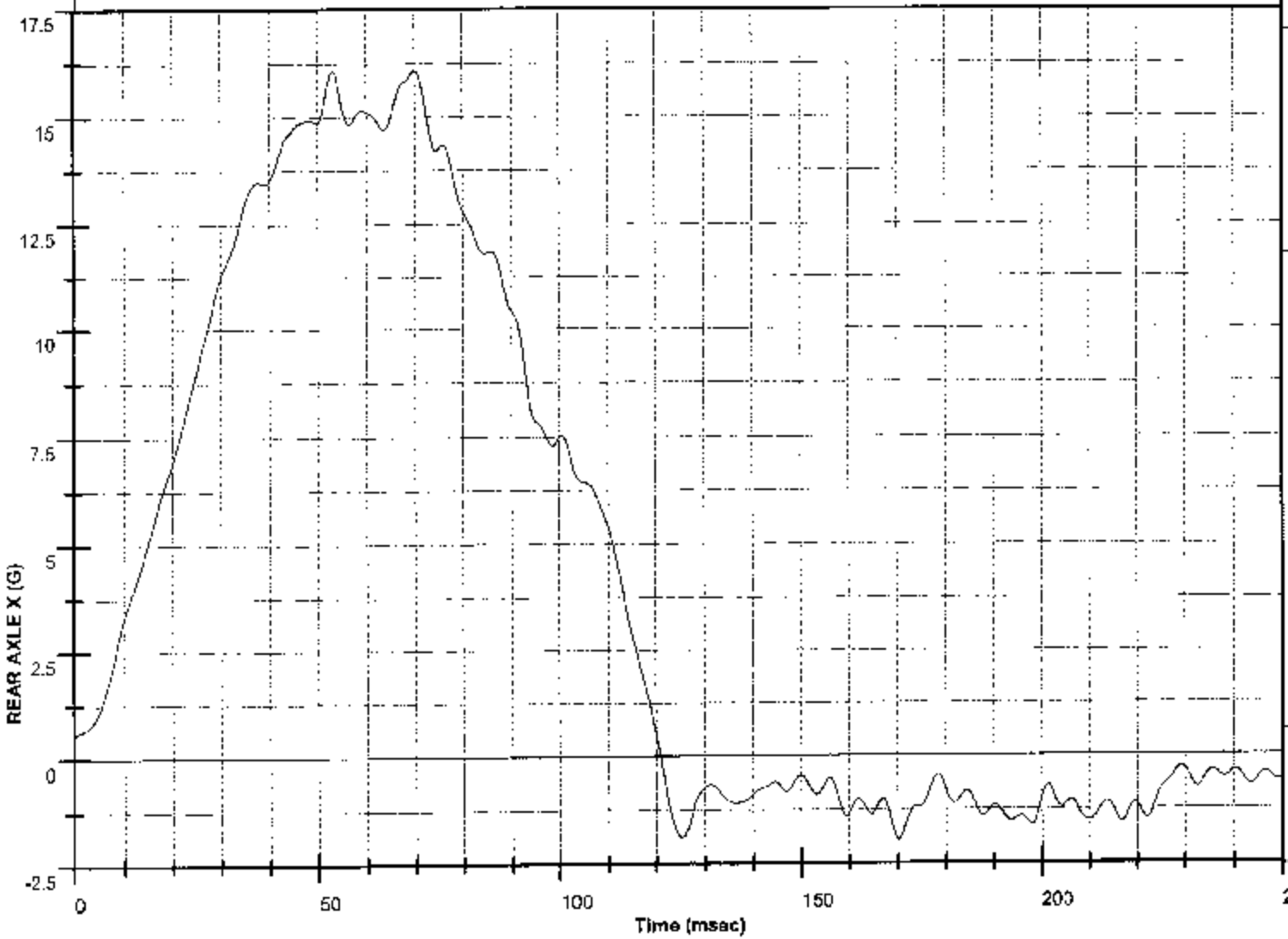

Maximum: 16.1 G
Time: 69.9 msec

Minimum: -1.9 G
Time: 170.2 msec

Value at T0: 0.5 G

Plotted By: C. Gadberry

On: 09.24.2003 21:12:20

Test Desc: FMVSS 208 SLED

Component: 2002 TOYOTA AVALON 4 DOOR (C25111)

TestNumber: H03432

Test Date: 09/17/03

Chn Name: DRIVER HEAD X

CFC: 1000

File Name: H03432AT.A53

Sensor S/N: AH5J3

MGA Research Corp
Accelerator Sled Facility
5000 Warren Road,
Burlington, WI 53105
Ph #: 262-763-2705
Fax #: 262-763-0934

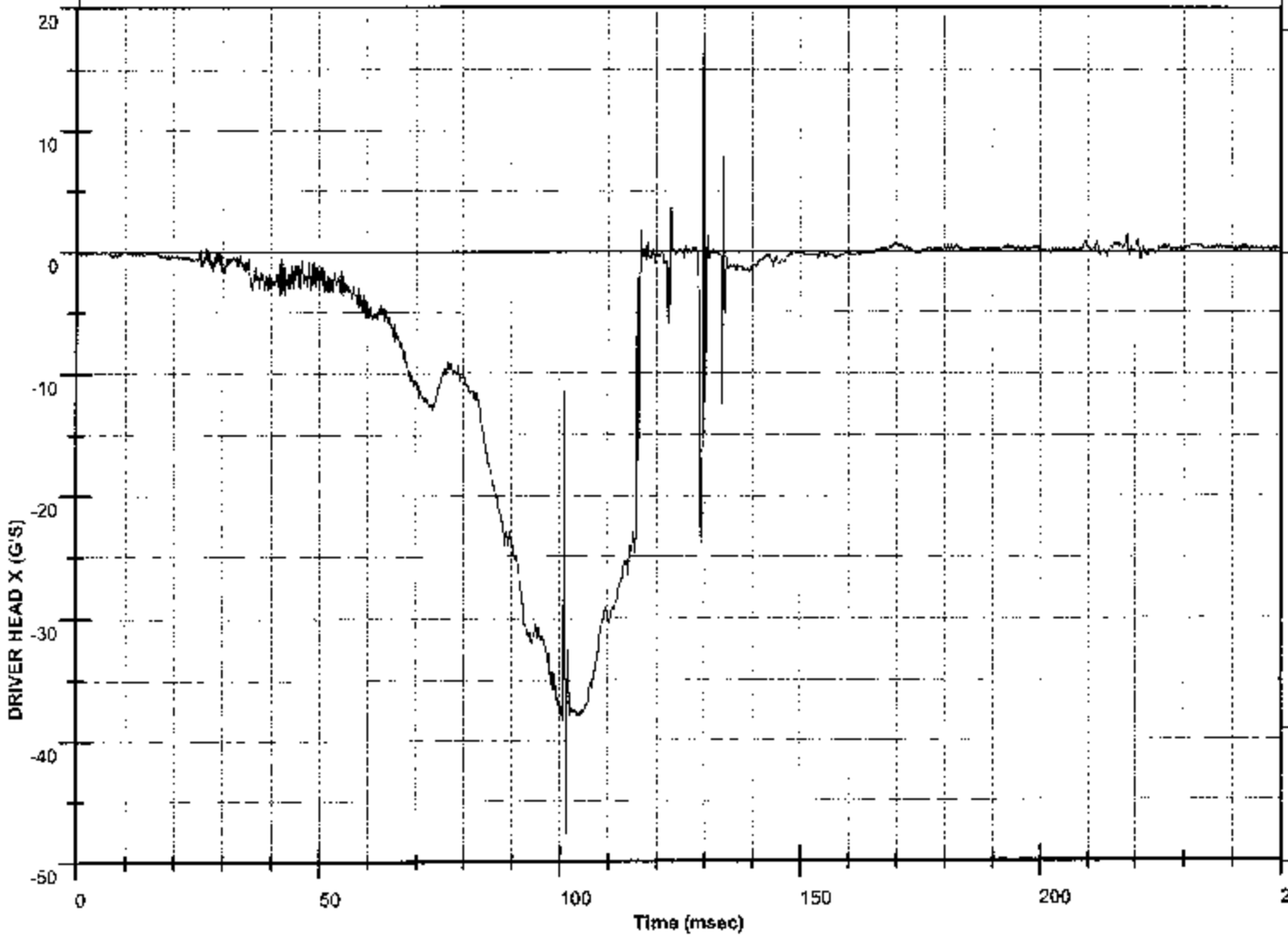

Maximum: 17.5 G'S
Time: 129.9 msec

Minimum: -47.7 G'S
Time: 101.3 msec

Value at T0: -0.0 G'S

Plotted By: C. Gadberry
On: 09.24.2003 21:11:07

Test Desc: FMVSS 208 SLED

Component: 2002 TOYOTA AVALON 4 DOOR (C25111)

TestNumber: H03432

Test Date: 09/17/03

Chn Name: DRIVER HEAD Y

CFC: 1000

File Name: H03432AT.A05

Sensor S/N:AH5H6

MGA Research Corp
Accelerator Sled Facility
5000 Warren Road,
Burlington, WI 53105
Ph #: 262-763-2705
Fax #: 262-763-0934

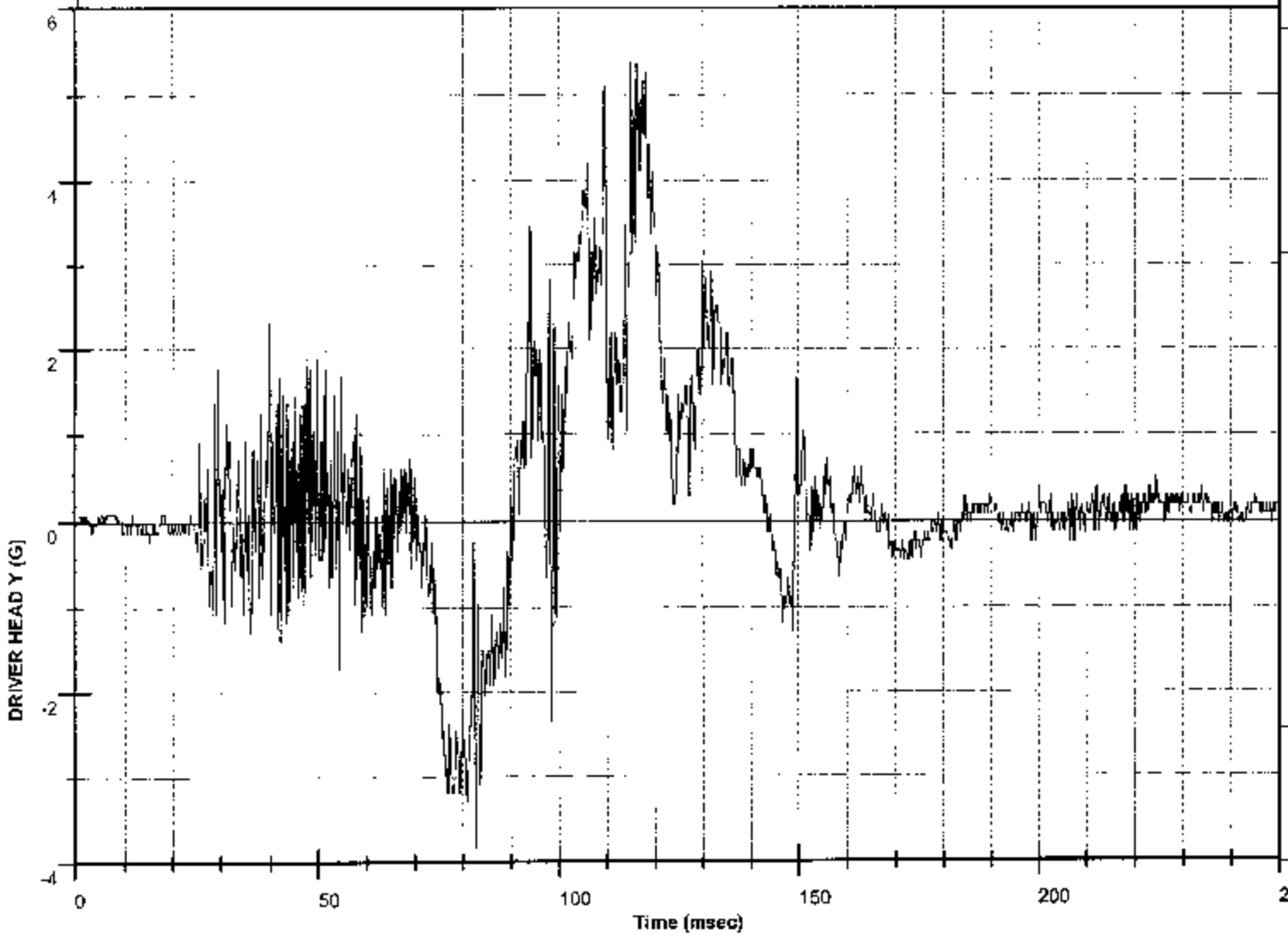

Maximum: 5.4 G
Time: 115.0 msec

Minimum: -3.8 G
Time: 82.7 msec

Value at T0: 0.1 G

Plotted By: C. Gadberry
On: 09.24.2003 21:11:09

Test Desc: FMVSS 208 SLED

Component: 2002 TOYOTA AVALON 4 DOOR (C25111)

TestNumber: H03432

Test Date: 09/17/03

Chn Name: DRIVER HEAD Z

CFC: 1000

File Name: H03432AT.A06

Sensor S/N: AH5LI

MGA Research Corp
Accelerator Sled Facility
5000 Warren Road,
Burlington, WI 53105
Ph #: 262-763-2705
Fax #: 262-763-0934

Maximum: 8.1 G
Time: 72.5 msec

Minimum: -17.1 G
Time: 99.5 msec

Value at T0: -0.0 G

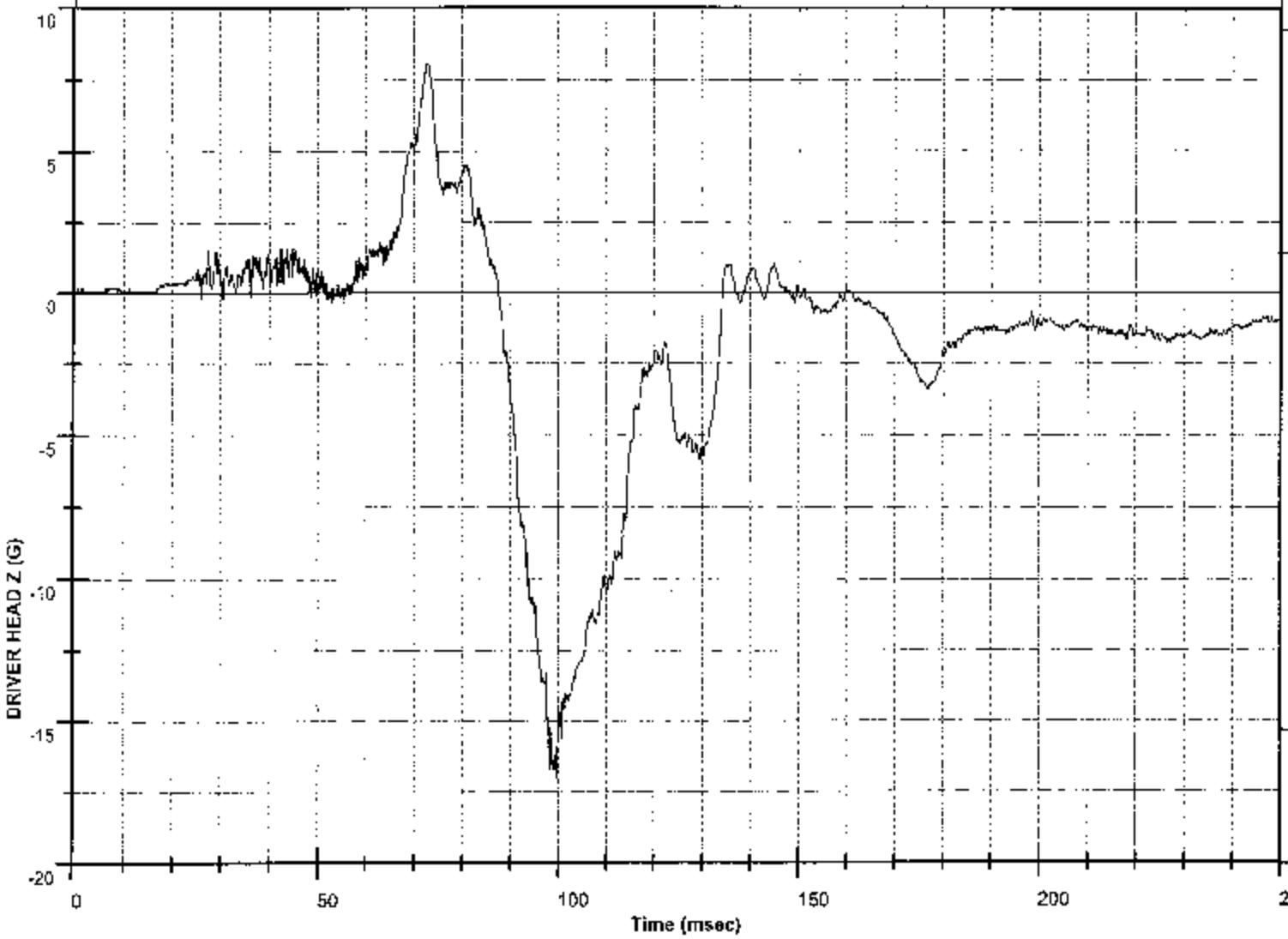

Plotted By: C. Gadberry

On: 09.24.2003 21:11:11

Test Desc: FMVSS 208 SLED

Component: 2002 TOYOTA AVALON 4 DOOR (C25111)

TestNumber: H03432

Test Date: 09/17/03

Chn Name: DRIVER HEAD RESULTANT ACCELERATION

CFC: 1000

File Name: H03432AV.A05

Sensor S/N:AH5J3

MGA Research Corp
Accelerator Sled Facility
5000 Warren Road,
Burlington, WI 53105
Ph #: 262-763-2705
Fax #: 262-763-0934

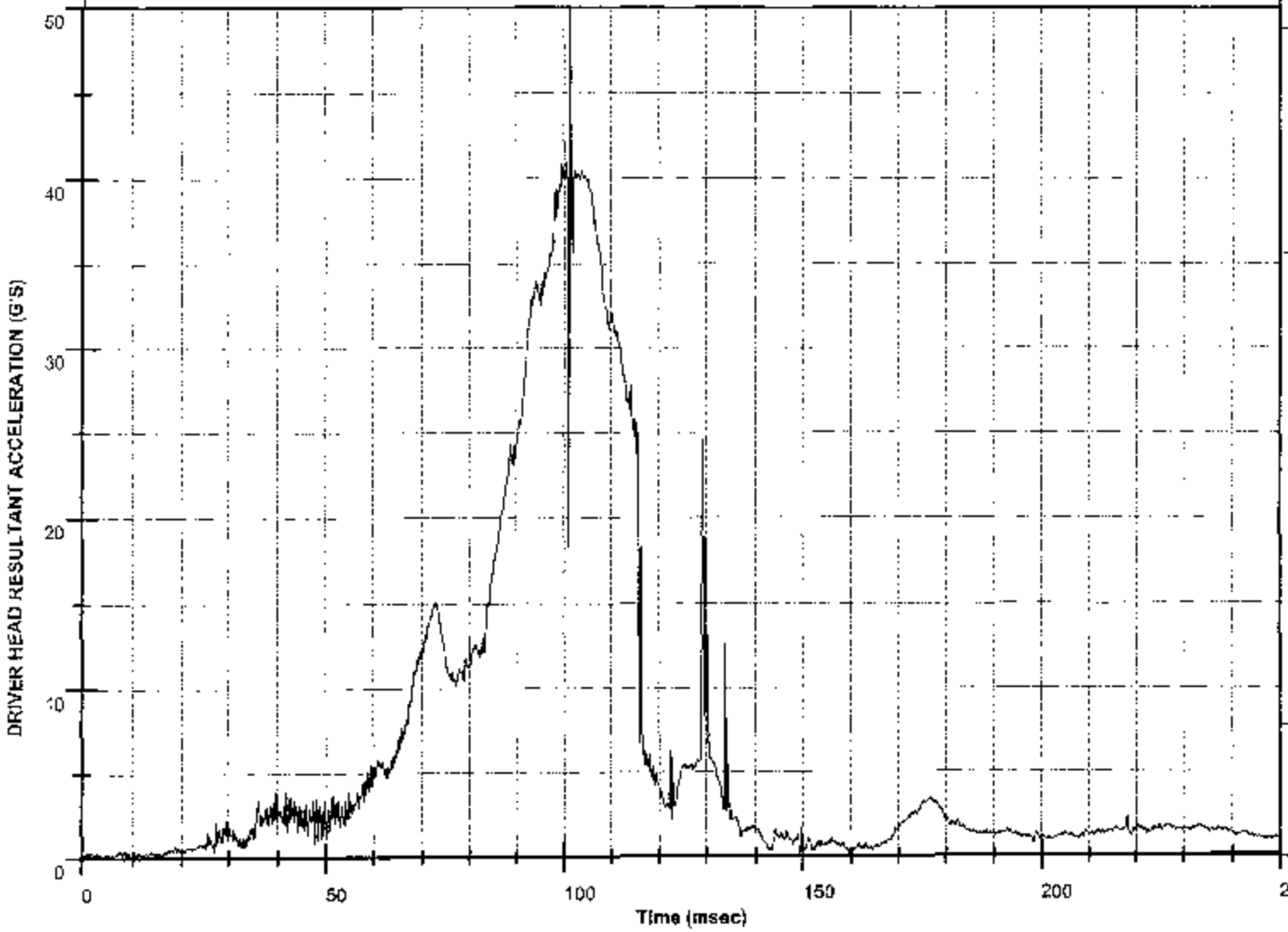

Maximum: 49.9 G'S
Time: 101.3 msec

Minimum: 0.1 G'S
Time: 10.8 msec

Value at T0: 0.1 G'S

HIC VAL: 173.8
T1: 86.4 msec
T2: 115.9 msec

HIC36 VAL: 173.8
T1: 86.4 msec
T2: 115.9 msec

HIC15 VAL: 126.2
T1: 93.5 msec
T2: 108.5 msec

Plotted By: C. Gadberry
On: 09.24.2003 21:11:14

Test Desc: FMVSS 208 SLED

Component: 2002 TOYOTA AVALON 4 DOOR (C25111)

TestNumber: H03432

Test Date: 09/17/03

Chn Name: DRIVER NECK FX

CFC: 1000

File Name: H03432FT.F12

Sensor S/N:606FX

MGA Research Corp
Accelerator Sled Facility
5000 Warren Road,
Burlington, WI 53105
Ph #: 262-763-2705
Fax #: 262-763-0934

Maximum: 447.4 N
Time: 84.3 msec

Minimum: -150.8 N
Time: 153.9 msec

Value at T0: -4.5 N

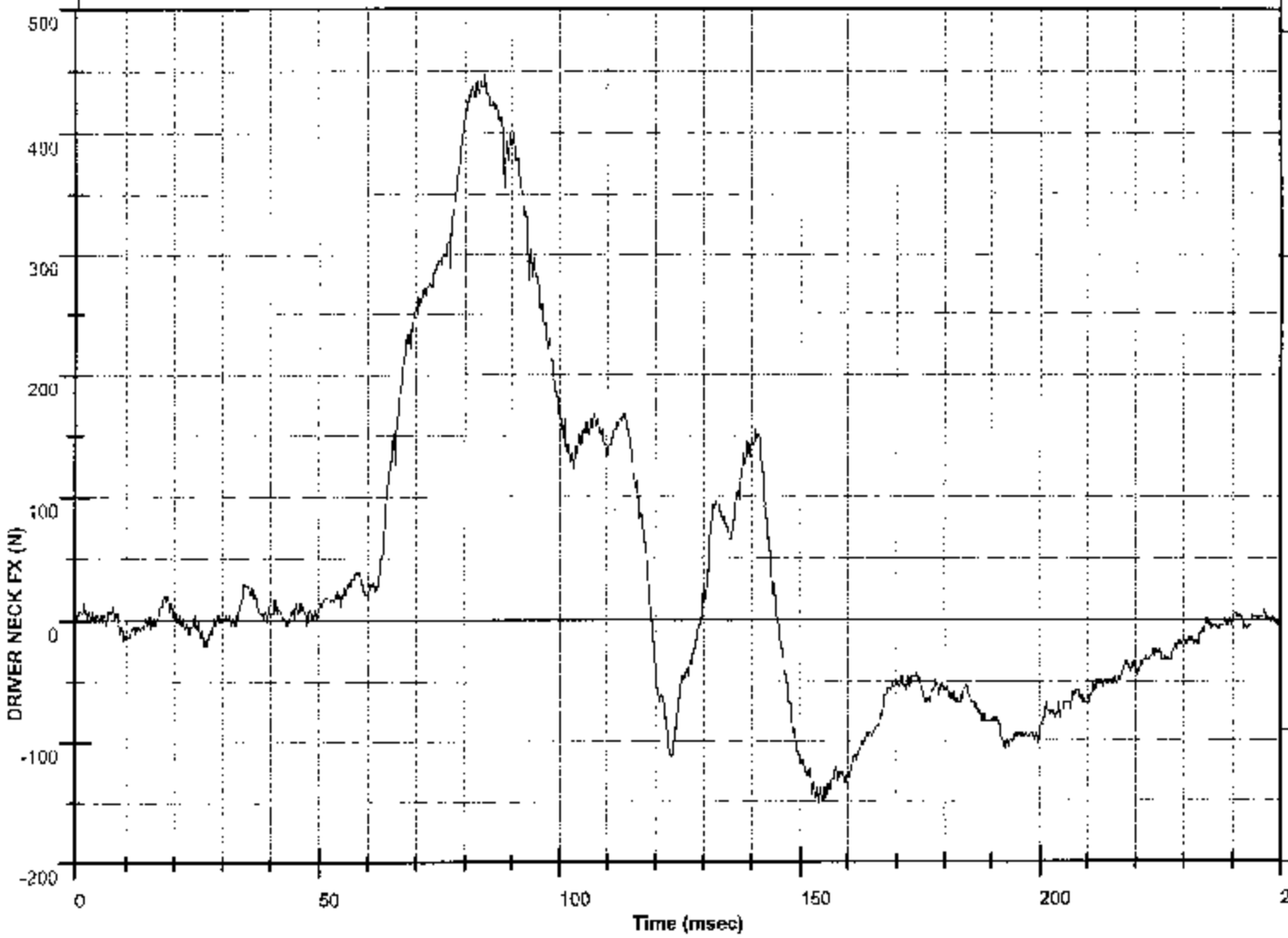

Plotted By: C. Gadberry

On: 09.24.2003 21:11:16

Test Desc: **FMVSS 208 SLED**

Component: **2002 TOYOTA AVALON 4 DOOR (C25111)**

TestNumber: **H03432**

Test Date: **09/17/03**

Chn Name: **DRIVER NECK FY**

CFC: **1000**

File Name: **H03432FT.F13**

Sensor S/N:**606FY**

MGA Research Corp
Accelerator Sled Facility
5000 Warren Road,
Burlington, WI 53105
Ph #: 262-763-2705
Fax #: 262-763-0934

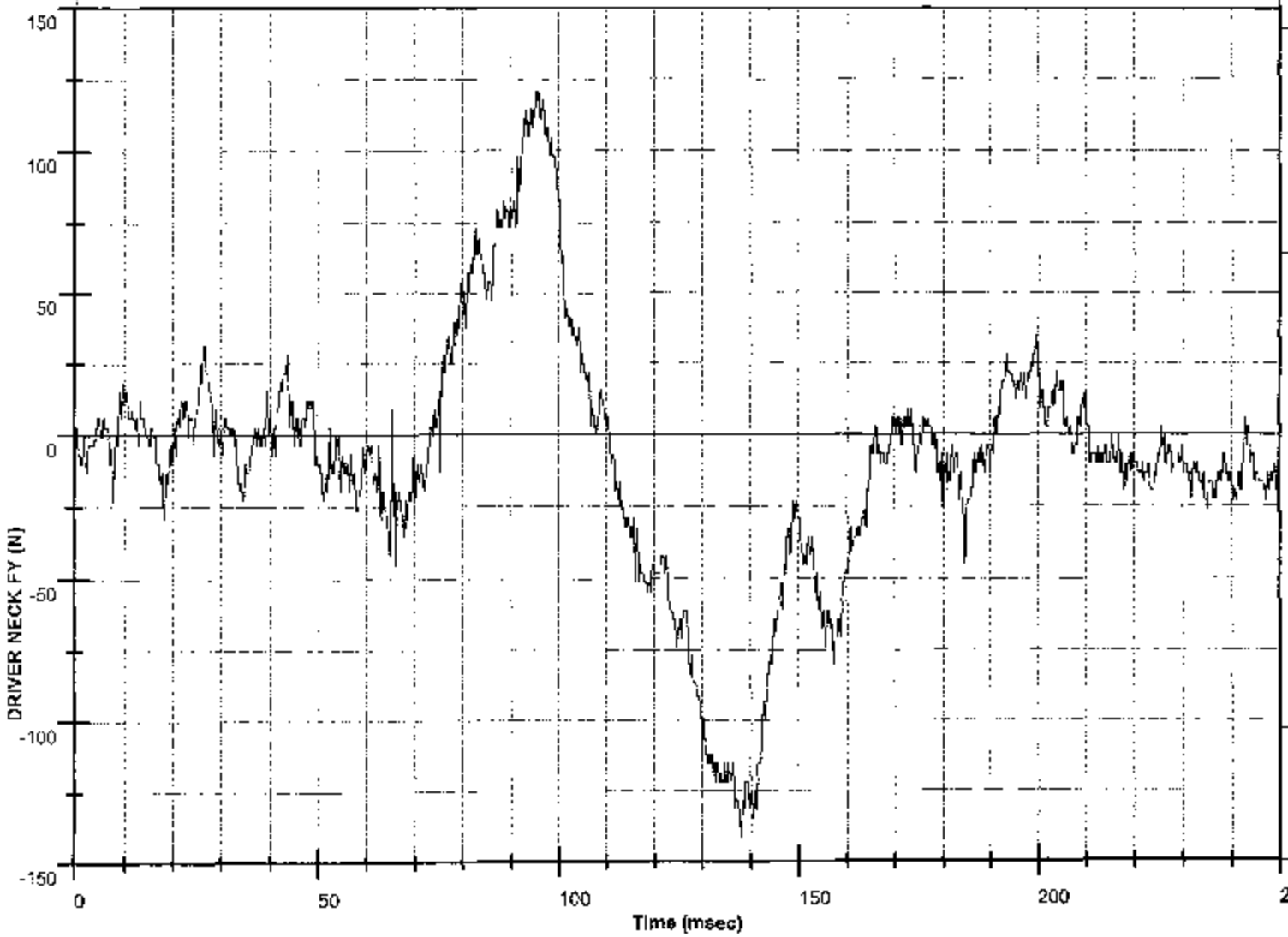

Maximum: **120.7 N**
Time: **95.4 msec**

Minimum: **-140.9 N**
Time: **137.9 msec**

Value at T0: **2.7 N**

Plotted By: **C. Gadberry**

On: **09.24.2003 21:11:18**

Test Desc: FMVSS 208 SLED
Component: 2002 TOYOTA AVALON 4 DOOR (C25111)
TestNumber: H03432
Test Date: 09/17/03

Chn Name: DRIVER NECK FZ
CFC: 1000
File Name: H03432FT.F14
Sensor S/N: 606FZ

MGA Research Corp
Accelerator Sled Facility
5000 Warren Road,
Burlington, WI 53105
Ph #: 262-763-2705
Fax #: 262-763-0934

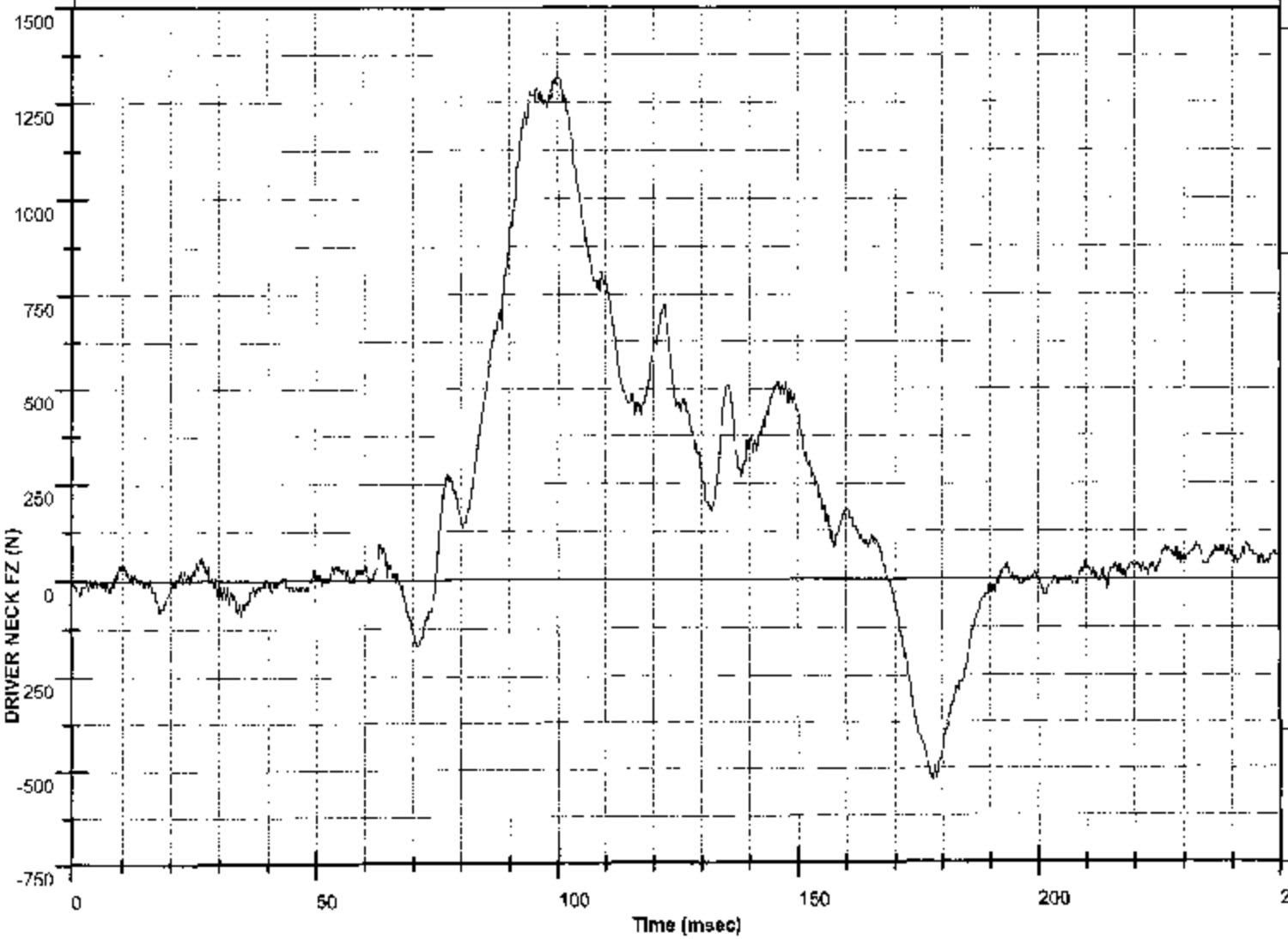

Maximum: 1,332.8 N
Time: 99.8 msec

Minimum: -528.6 N
Time: 177.8 msec

Value at T0: 4.8 N

Plotted By: C. Gadberry
On: 09.24.2003 21:11:20

Test Desc: FMVSS 208 SLED
Component: 2002 TOYOTA AVALON 4 DOOR (C25111)
TestNumber: H03432
Test Date: 09/17/03

Chn Name: DRIVER NECK MX
CFC: 600
File Name: H03432MF.M15
Sensor S/N: 606MX

MGA Research Corp
Accelerator Sled Facility
5000 Warren Road,
Burlington, WI 53105
Ph #: 262-763-2705
Fax #: 262-763-0934

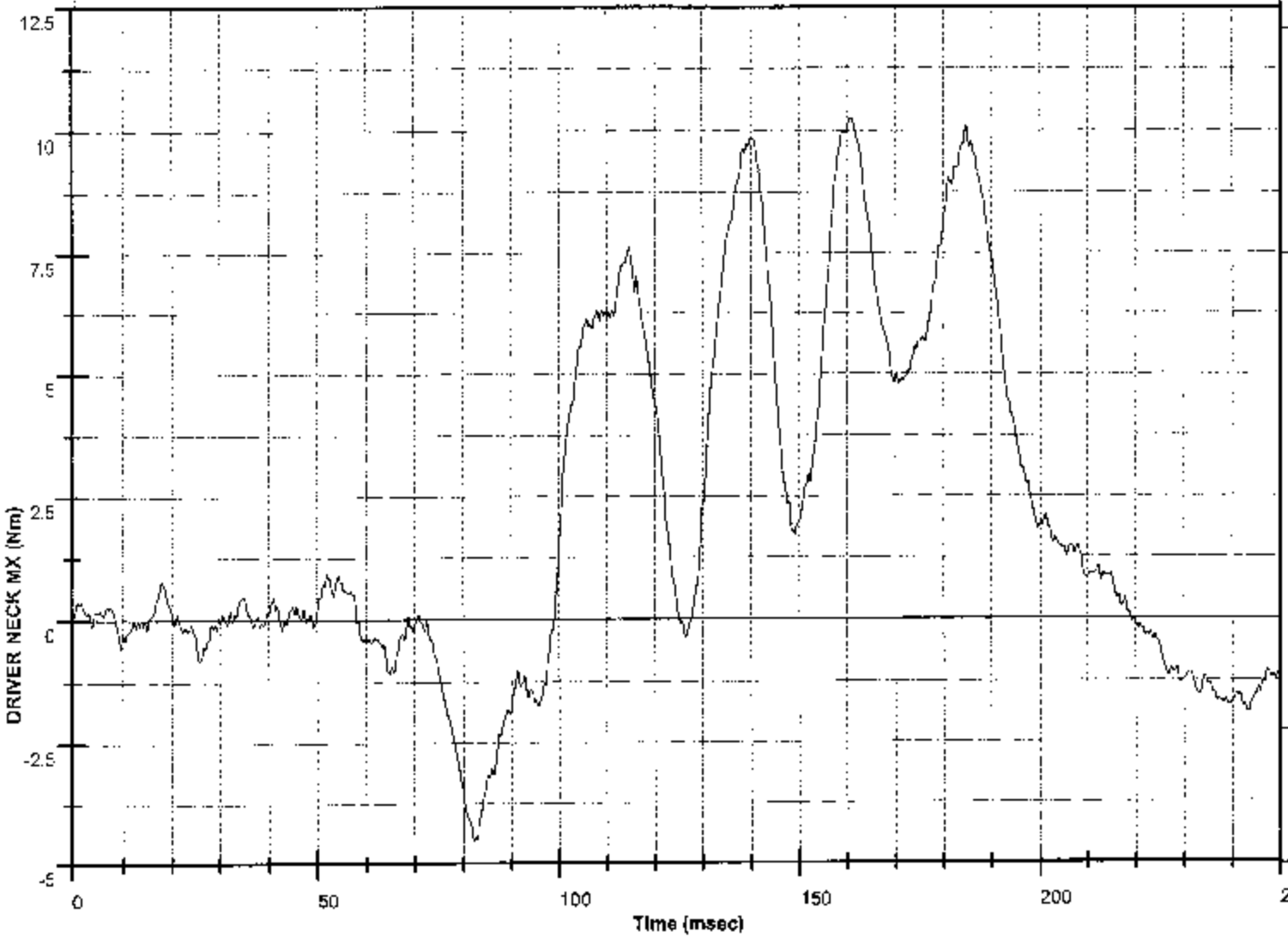

Maximum: 10.3 Nm
Time: 160.8 msec

Minimum: -4.5 Nm
Time: 82.1 msec

Value at T0: -0.1 Nm

Plotted By: C. Gadberry
On: 09.24.2003 21:11:22

Test Desc: FMVSS 208 SLED

Component: 2002 TOYOTA AVALON 4 DOOR (C25111)

TestNumber: H03432

Test Date: 09/17/03

Chn Name: DRIVER NECK MOMENT Y

CFC: 600

File Name: H03432MF.M54

Sensor S/N: 606

MGA Research Corp
Accelerator Sled Facility
5000 Warren Road,
Burlington, WI 53105
Ph #: 262-763-2705
Fax #: 262-763-0934

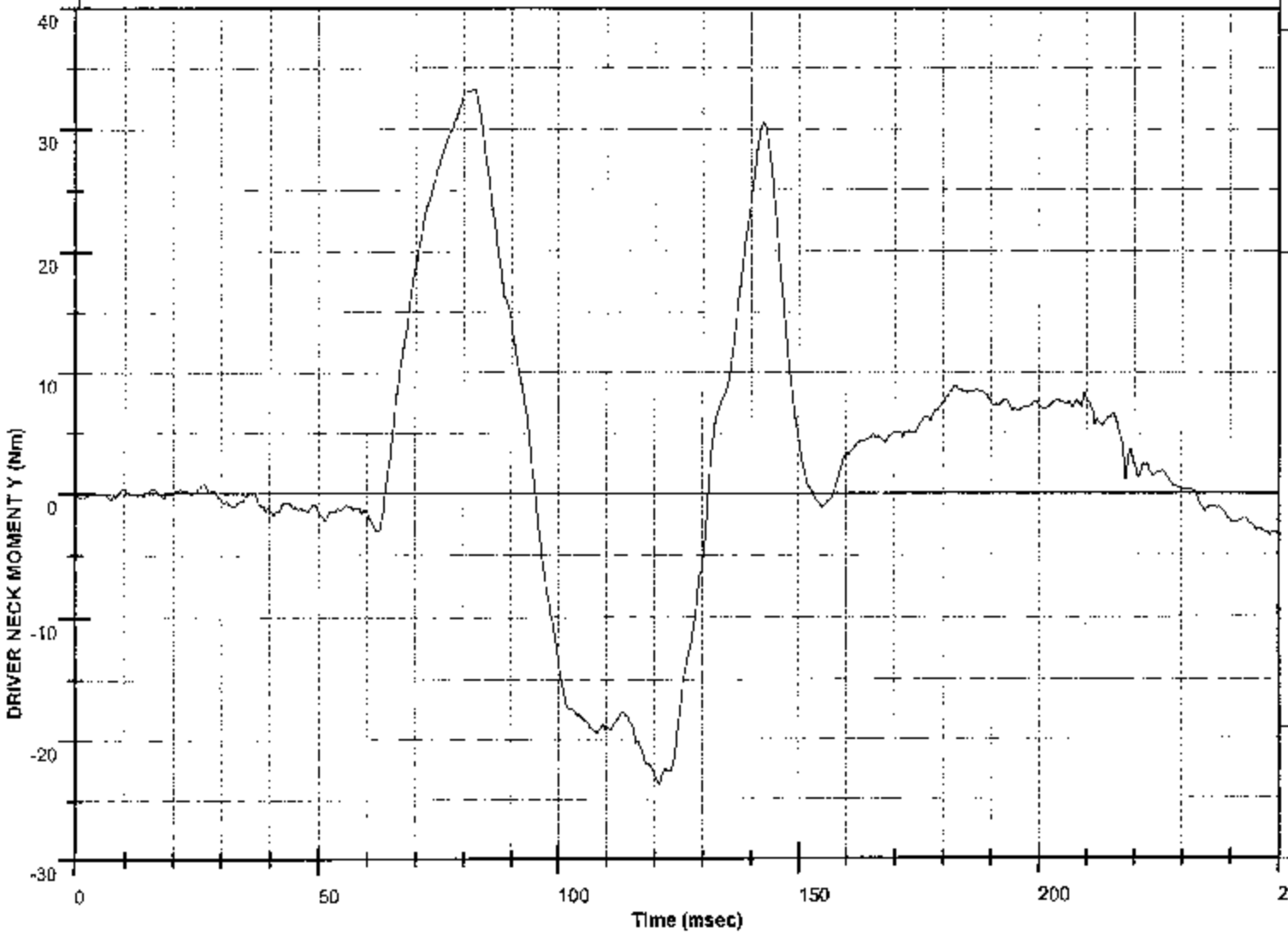

Maximum: 33.3 Nm
Time: 82.0 msec

Minimum: -23.7 Nm
Time: 120.9 msec

Value at T0: 0.0 Nm

Plotted By: C. Gadberry

On: 09.24.2003 21:11:24

Test Desc: FMVSS 208 SLED
Component: 2002 TOYOTA AVALON 4 DOOR (C25111)
TestNumber: H03432
Test Date: 09/17/03

Chn Name: DRIVER NECK MZ
CFC: 600
File Name: H03432MF.M17
Sensor S/N: 606MZ

MGA Research Corp
Accelerator Sled Facility
5000 Warren Road,
Burlington, WI 53105
Ph #: 262-763-2705
Fax #: 262-763-0934

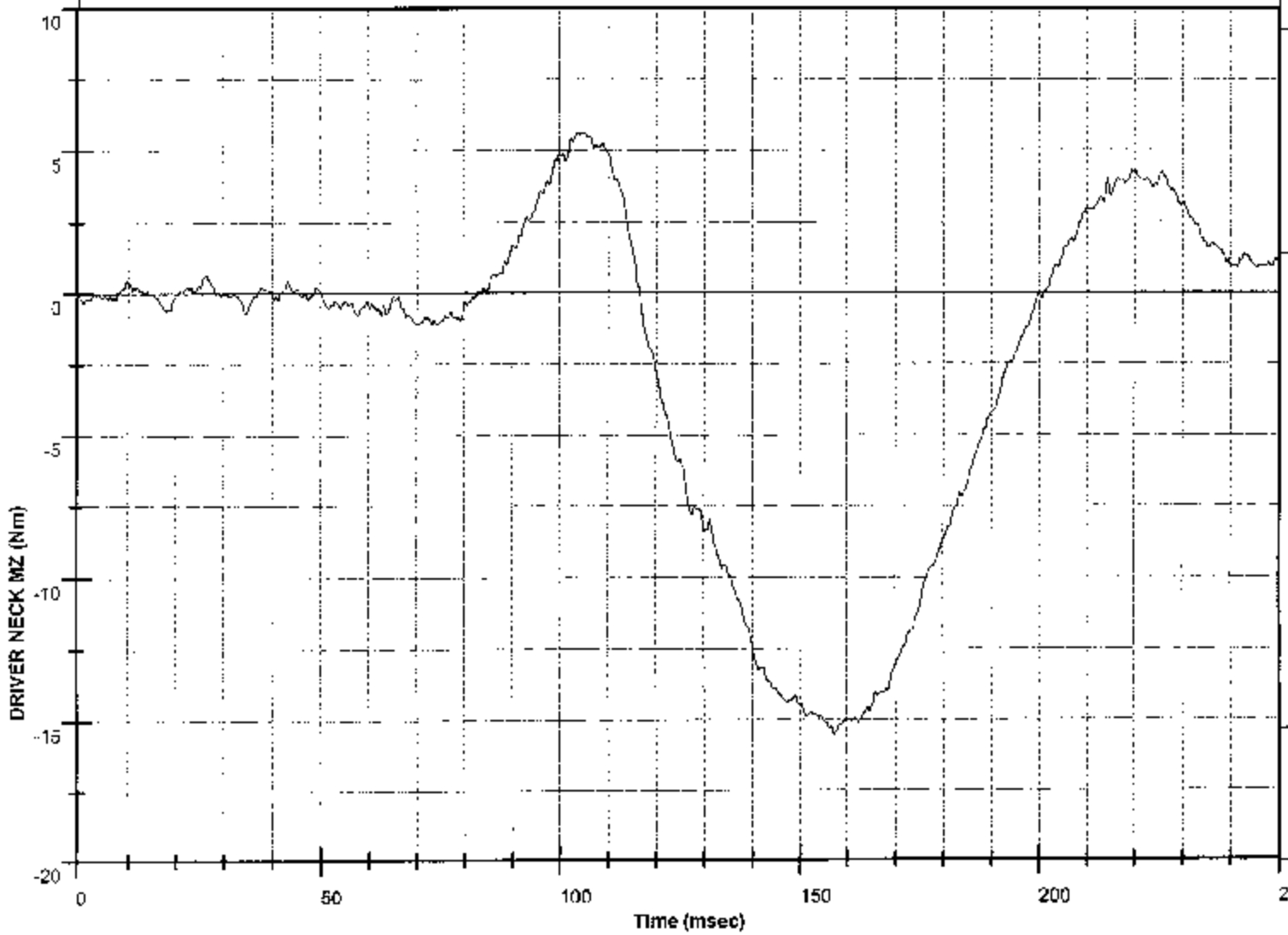

Maximum: 5.6 Nm
Time: 103.7 msec

Minimum: -15.5 Nm
Time: 157.1 msec

Value at T0: -0.0 Nm

Plotted By: C. Gadberry
On: 09.24.2003 21:11:25

Test Desc: FMVSS 208 SLED
Component: 2002 TOYOTA AVALON 4 DOOR (C25111)
TestNumber: H03432
Test Date: 09/17/03

Chn Name: DRIVER OCCIPITAL CONDYLE MOMENT Y
CFC: 600
File Name: H03432MO.M54
Sensor S/N:606

MGA Research Corp
Accelerator Sled Facility
5000 Warren Road,
Burlington, WI 53105
Ph #: 262-763-2705
Fax #: 262-763-0934

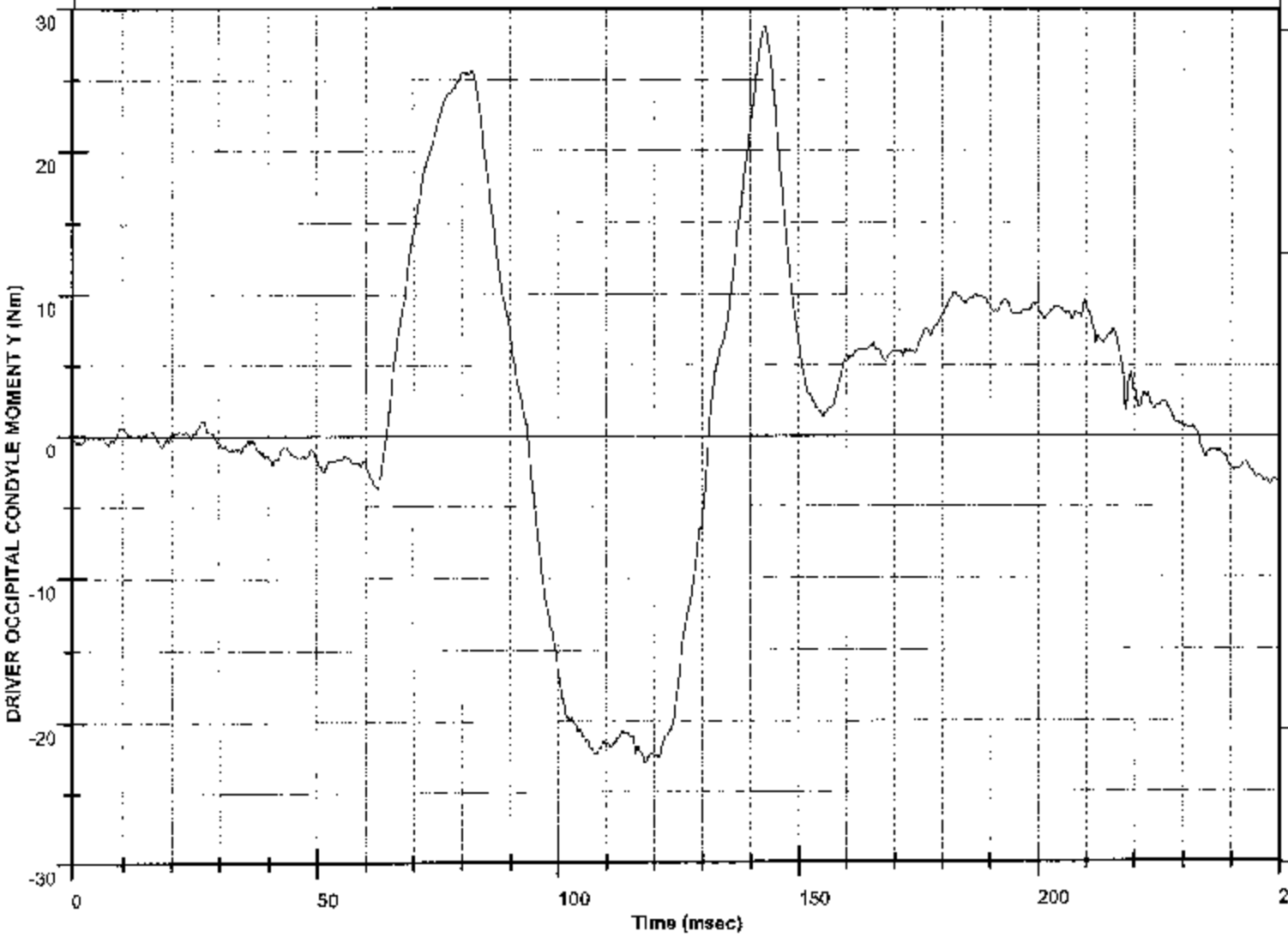

Maximum: 28.7 Nm
Time: 142.8 msec

Minimum: -22.9 Nm
Time: 118.2 msec

Value at T0: 0.1 Nm

Plotted By: C. Gadberry
On: 09.24.2003 21:11:27

Test Desc: **FMVSS 208 SLED**

Component: **2002 TOYOTA AVALON 4 DOOR (C25111)**

TestNumber: **H03432**

Test Date: **09/17/03**

Chn Name: **DRIVER CHEST X**

CFC: **180**

File Name: **H03432AF.A21**

Sensor S/N: **AGH90**

MGA Research Corp
Accelerator Sled Facility
5000 Warren Road,
Burlington, WI 53105
Ph #: 262-763-2705
Fax #: 262-763-0934

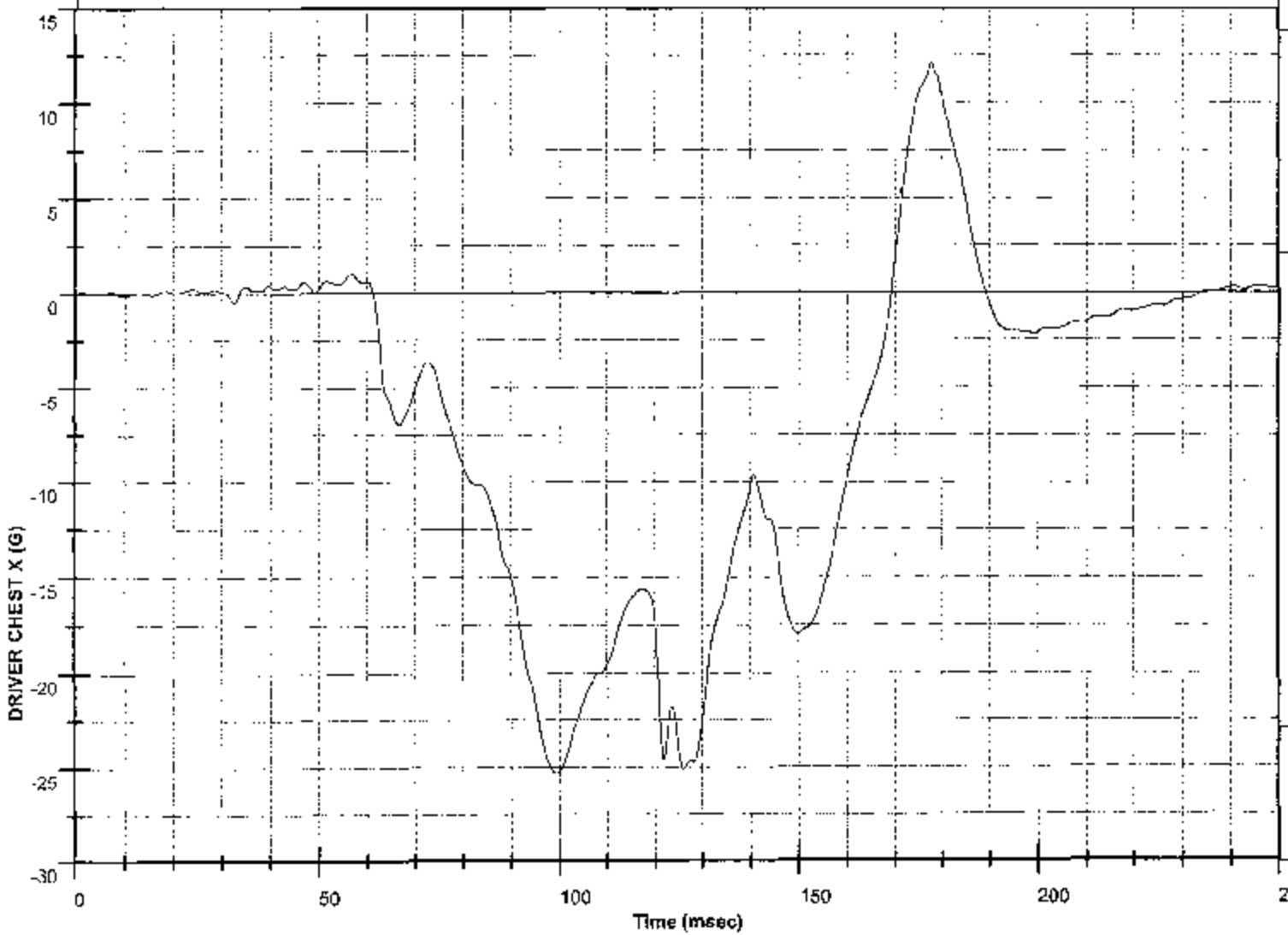

Maximum: **12.1 G**
Time: **177.8 msec**

Minimum: **-25.4 G**
Time: **99.4 msec**

Value at T0: **-0.0 G**

Plotted By: **C. Gadberry**

On: **09.24.2003 21:11:29**

Test Desc: **FMVSS 208 SLED**

Component: **2002 TOYOTA AVALON 4 DOOR (C25111)**

TestNumber: **H03432**

Test Date: **09/17/03**

Chn Name: **DRIVER CHEST Y**

CFC: **180**

File Name: **H03432AF.A46**

Sensor S/N: **AH467**

MGA Research Corp
Accelerator Sled Facility
5000 Warren Road,
Burlington, WI 53105
Ph #: 262-763-2705
Fax #: 262-763-0934

Maximum: **6.9 G**
Time: **129.1 msec**

Minimum: **-2.2 G**
Time: **177.8 msec**

Value at T0: **-0.0 G**

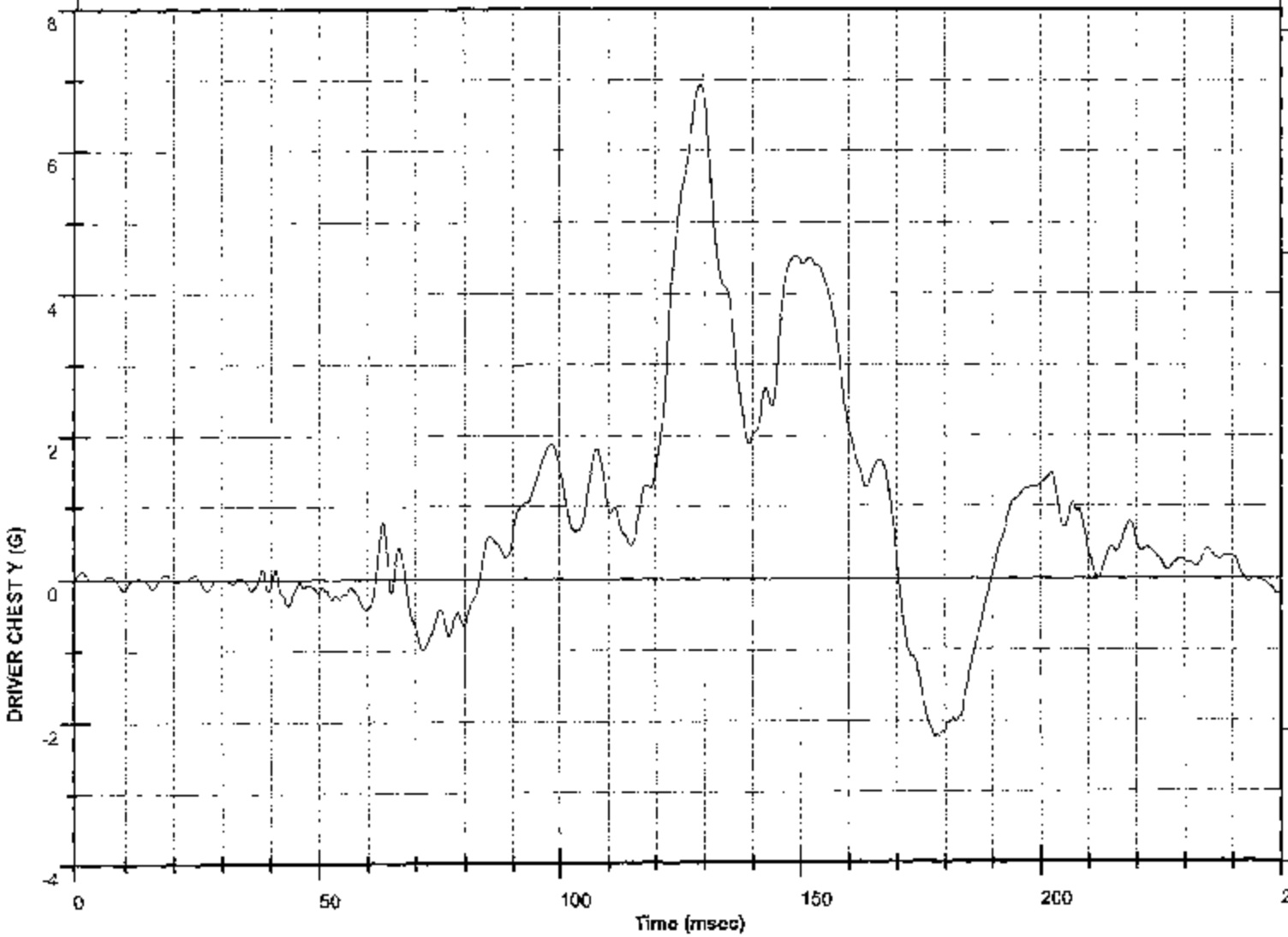

Plotted By: **C. Gadberry**

On: **09.24.2003 21:11:31**

Test Desc: FMVSS 208 SLED
Component: 2002 TOYOTA AVALON 4 DOOR (C25111)
TestNumber: H03432
Test Date: 09/17/03

Chn Name: DRIVER CHEST Z
CFC: 180
File Name: H03432AF.A23
Sensor S/N:AH5P1

MGA Research Corp
Accelerator Sled Facility
5000 Warren Road,
Burlington, WI 53105
Ph #: 262-763-2705
Fax #: 262-763-0934

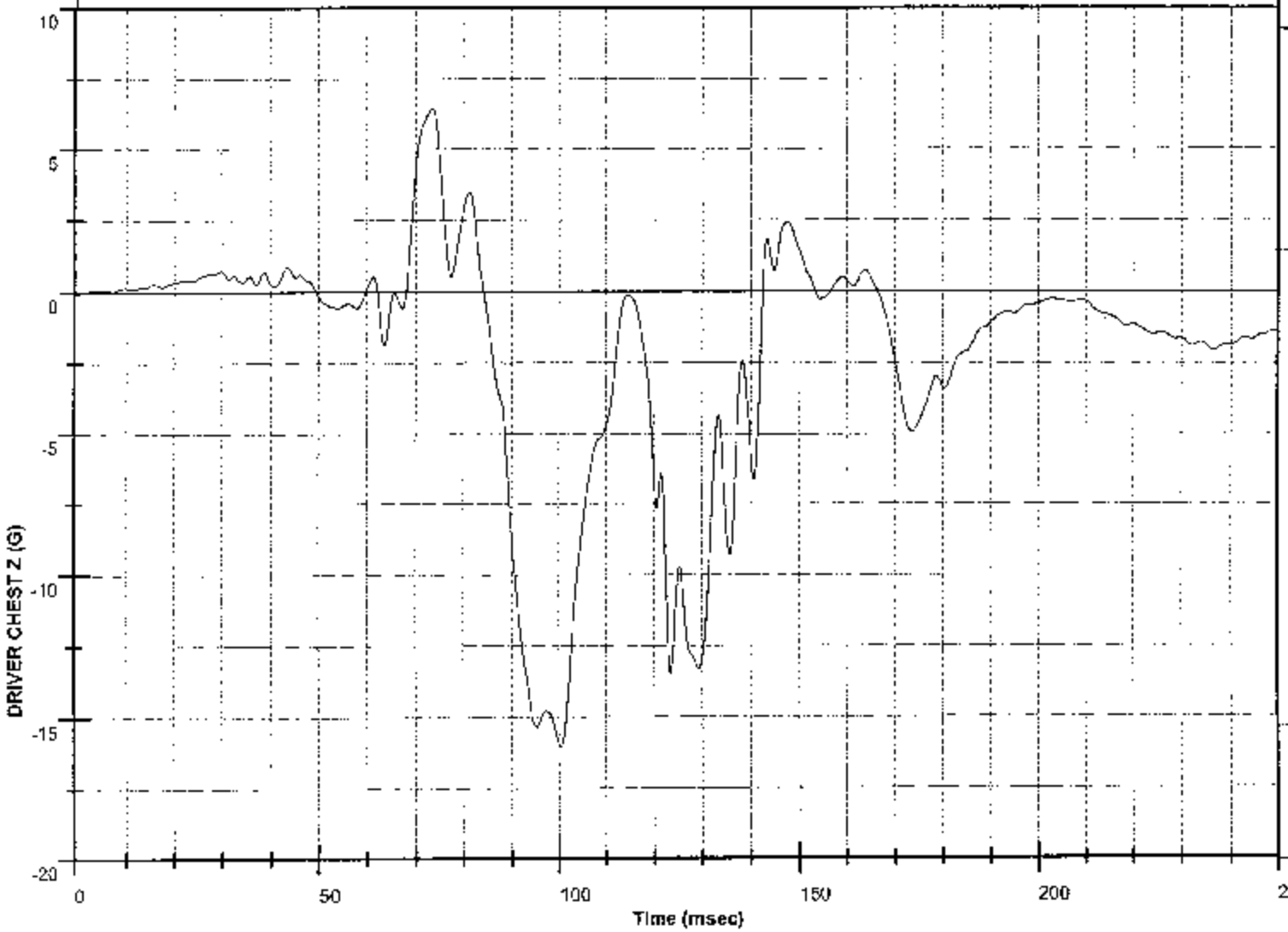

Maximum: 6.4 G
Time: 73.4 msec

Minimum: -16.0 G
Time: 100.3 msec

Value at T0: -0.1 G

Plotted By: C. Gadberry
On: 09.24.2003 21:11:33

Test Desc: FMVSS 208 SLED

Component: 2002 TOYOTA AVALON 4 DOOR (C25111)

TestNumber: H03432

Test Date: 09/17/03

Chn Name: DRIVER CHEST RESULTANT ACCELERATION

CFC: 180

File Name: H03432AV.A21

Sensor S/N:AH467

MGA Research Corp
Accelerator Sled Facility
5000 Warren Road,
Burlington, WI 53105
Ph #: 262-763-2705
Fax #: 262-763-0934

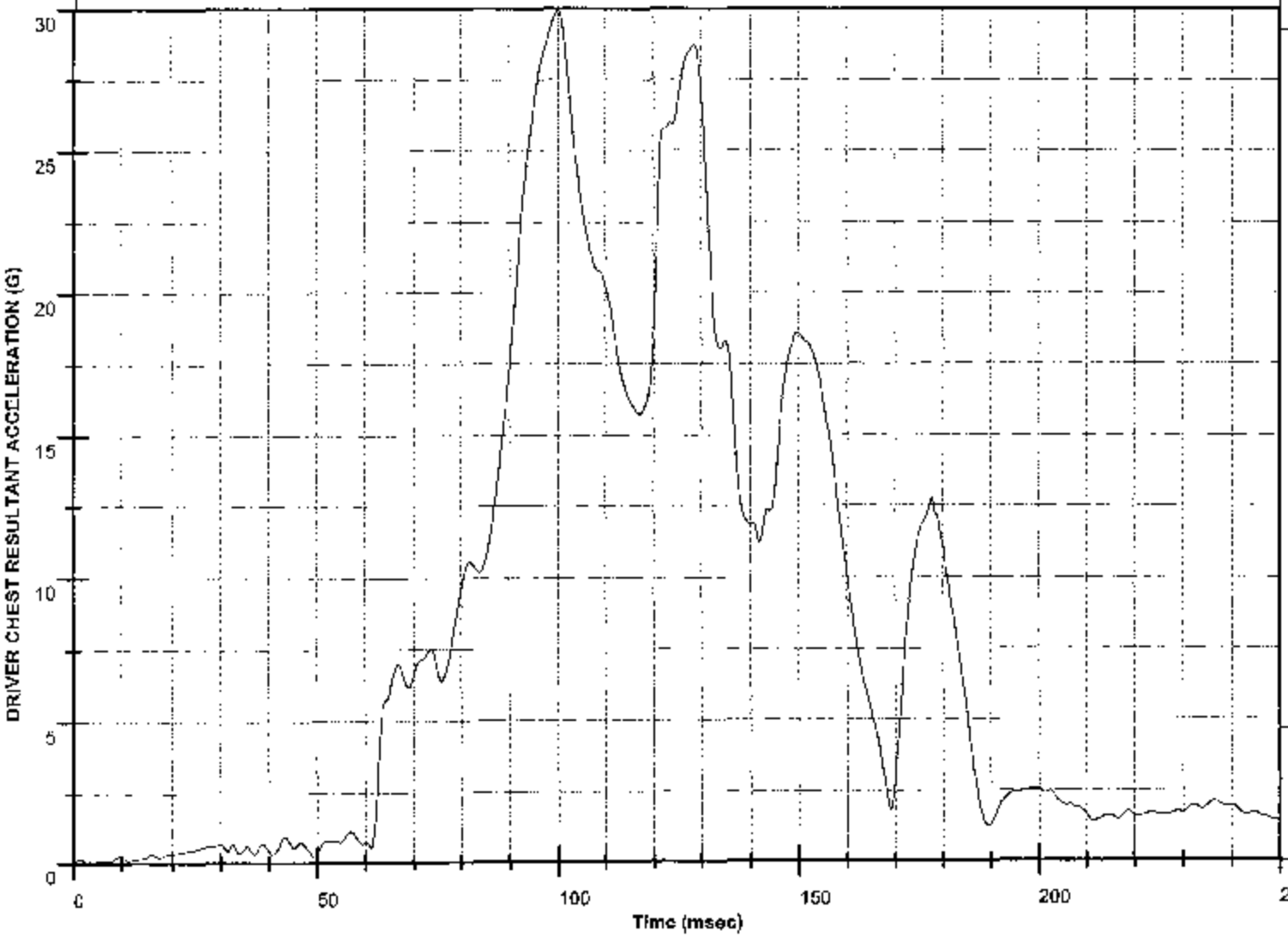

Maximum: 29.9 G
Time: 99.9 msec

Minimum: 0.1 G
Time: 4.4 msec

Value at T0: 0.1 G

Plotted By: C. Gadberry

On: 09.24.2003 21:11:35

Test Desc: FMVSS 208 SLED

Component: 2002 TOYOTA AVALON 4 DOOR (C25111)

TestNumber: H03432

Test Date: 09/17/03

Chn Name: DRIVER CHEST DISPLACEMENT

CFC: 600

File Name: H03432DF.D38

Sensor S/N:312

MGA Research Corp
Accelerator Sled Facility
5000 Warren Road,
Burlington, WI 53105
Ph #: 262-763-2705
Fax #: 262-763-0934

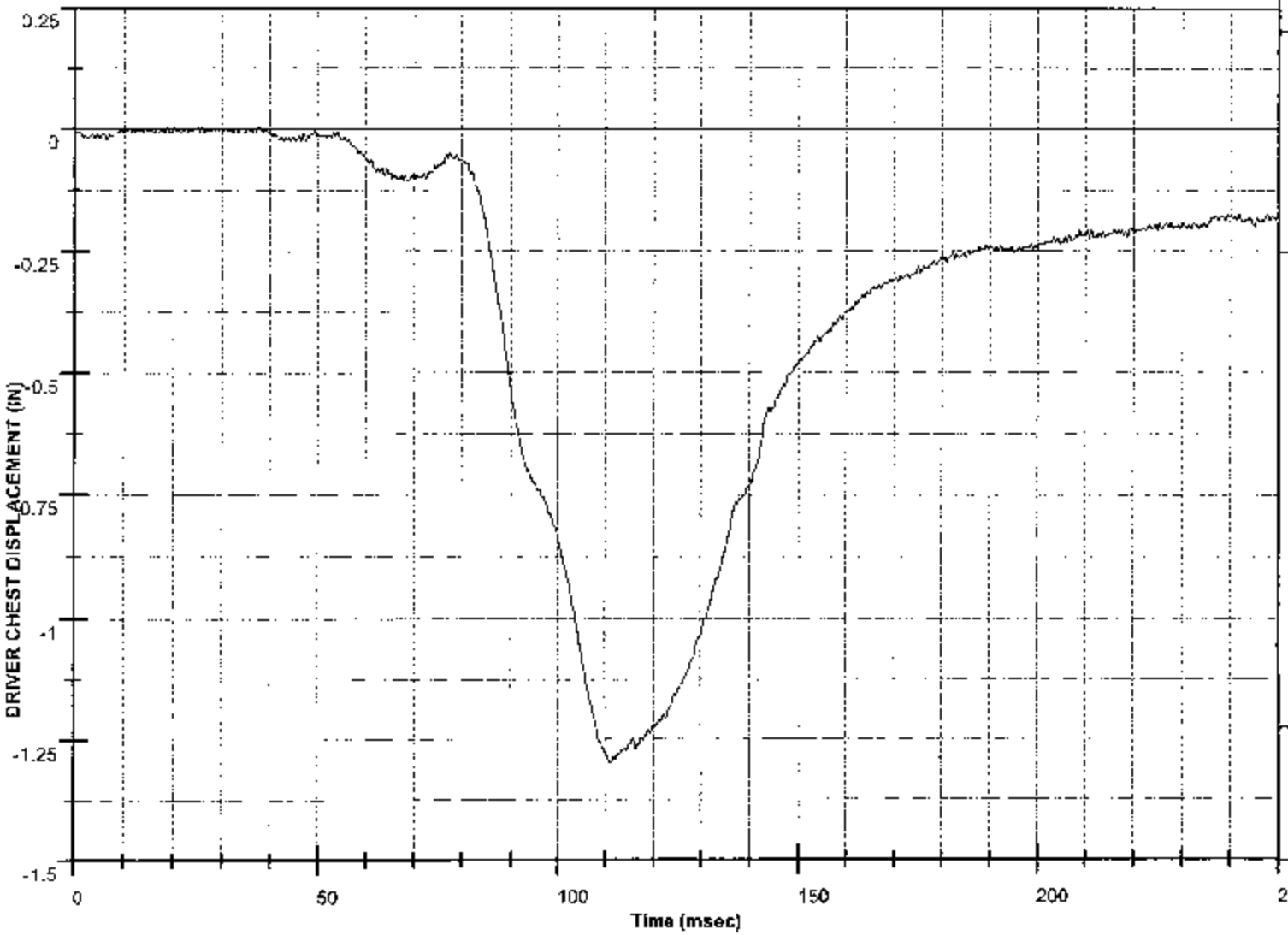

Maximum: 0.0 IN
Time: 0.0 msec

Minimum: -1.3 IN
Time: 111.1 msec

Value at T0: 0.0 IN

Plotted By: C. Gadberry
On: 09.24.2003 21:11:37

Test Desc: FMVSS 208 SLED

Component: 2002 TOYOTA AVALON 4 DOOR (C25111)

TestNumber: H03432

Test Date: 09/17/03

Chn Name: DRIVER LEFT FEMUR

CFC: 600

File Name: H03432FF.F08

Sensor S/N:9428

MGA Research Corp
Accelerator Sled Facility
5000 Warren Road,
Burlington, WI 53105
Ph #: 262-763-2705
Fax #: 262-763-0934

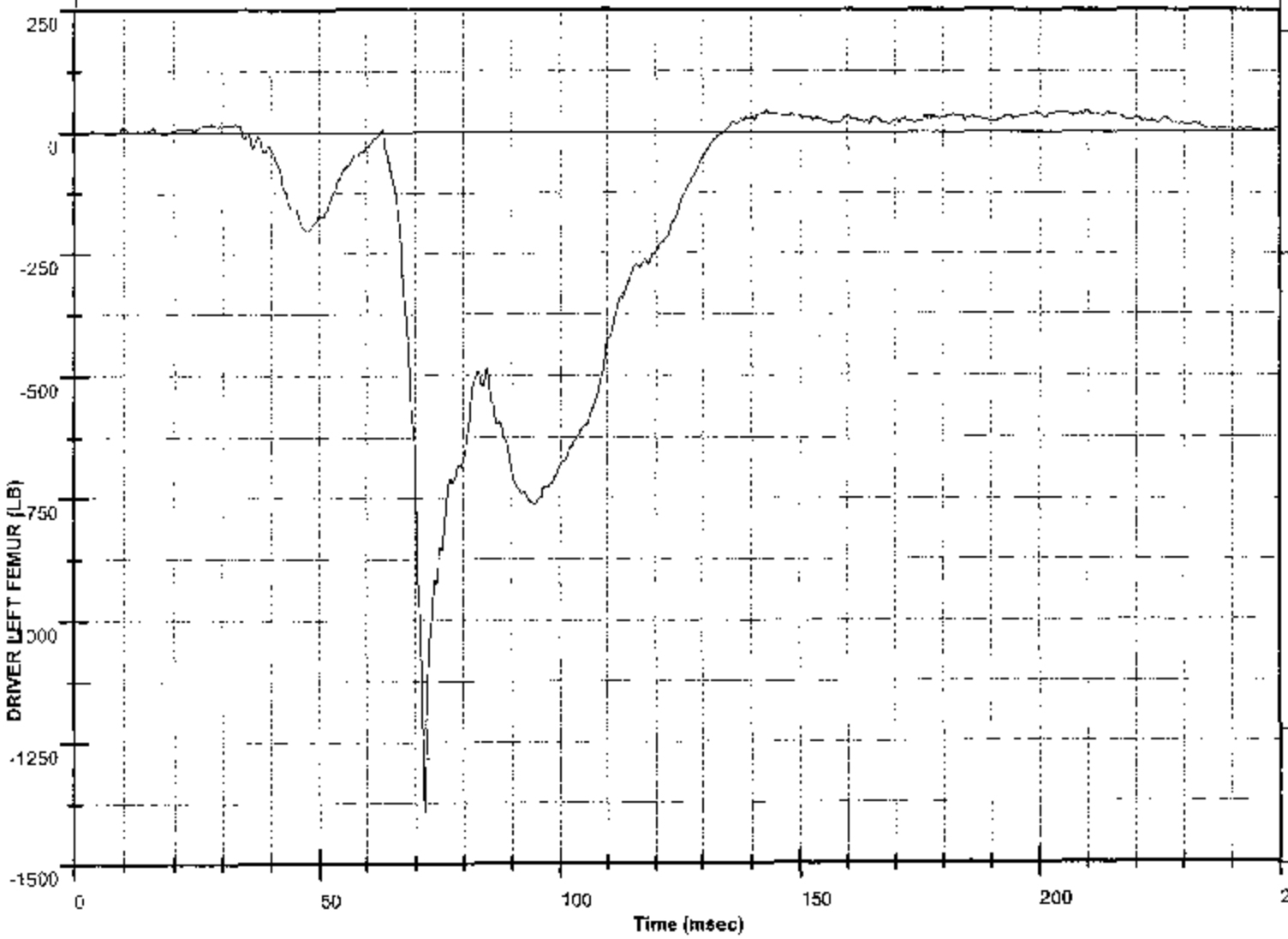

Maximum: 45.2 LB
Time: 209.8 msec

Minimum: -1,393.4 LB
Time: 71.9 msec

Value at T0: 1.5 LB

Plotted By: C. Gadberry
On: 09.24.2003 21:28:16

Test Desc: **FMVSS 208 SLED**

Component: **2002 TOYOTA AVALON 4 DOOR (C25111)**

TestNumber: **H03432**

Test Date: **09/17/03**

Chn Name: **DRIVER RIGHT FEMUR**

CFC: **600**

File Name: **H03432FF.F09**

Sensor S/N: **9427**

MGA Research Corp
Accelerator Sled Facility
5000 Warren Road,
Burlington, WI 53105
Ph #: 262-763-2705
Fax #: 262-763-0934

Maximum: 110.3 LB
Time: 248.9 msec

Minimum: -1,321.5 LB
Time: 74.8 msec

Value at T0: **2.3 LB**

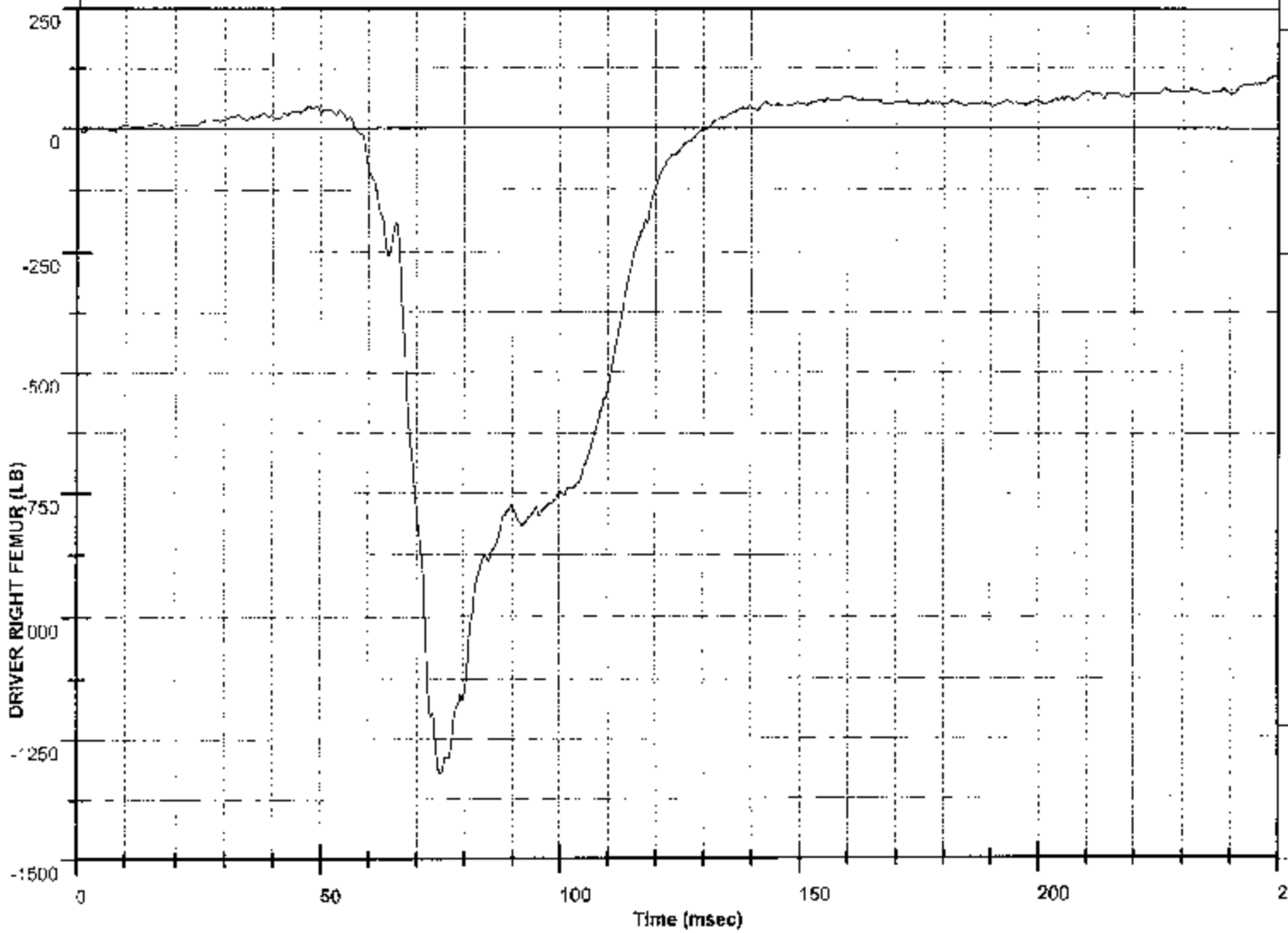

Plotted By: **C. Gadberry**

On: **09.24.2003 21:28:18**

Test Desc: FMVSS 208 SLED

Component: 2002 TOYOTA AVALON 4 DOOR (C25111)

TestNumber: H03432

Test Date: 09/17/03

Chn Name: PASSENGER HEAD X

CFC: 1000

File Name: H03432AT.A24

Sensor S/N: AGH79

MGA Research Corp
Accelerator Sled Facility
5000 Warren Road,
Burlington, WI 53105
Ph #: 262-763-2705
Fax #: 262-763-0934

Maximum: 3.0 G
Time: 37.6 msec

Minimum: -35.7 G
Time: 105.8 msec

Value at T0: -0.0 G

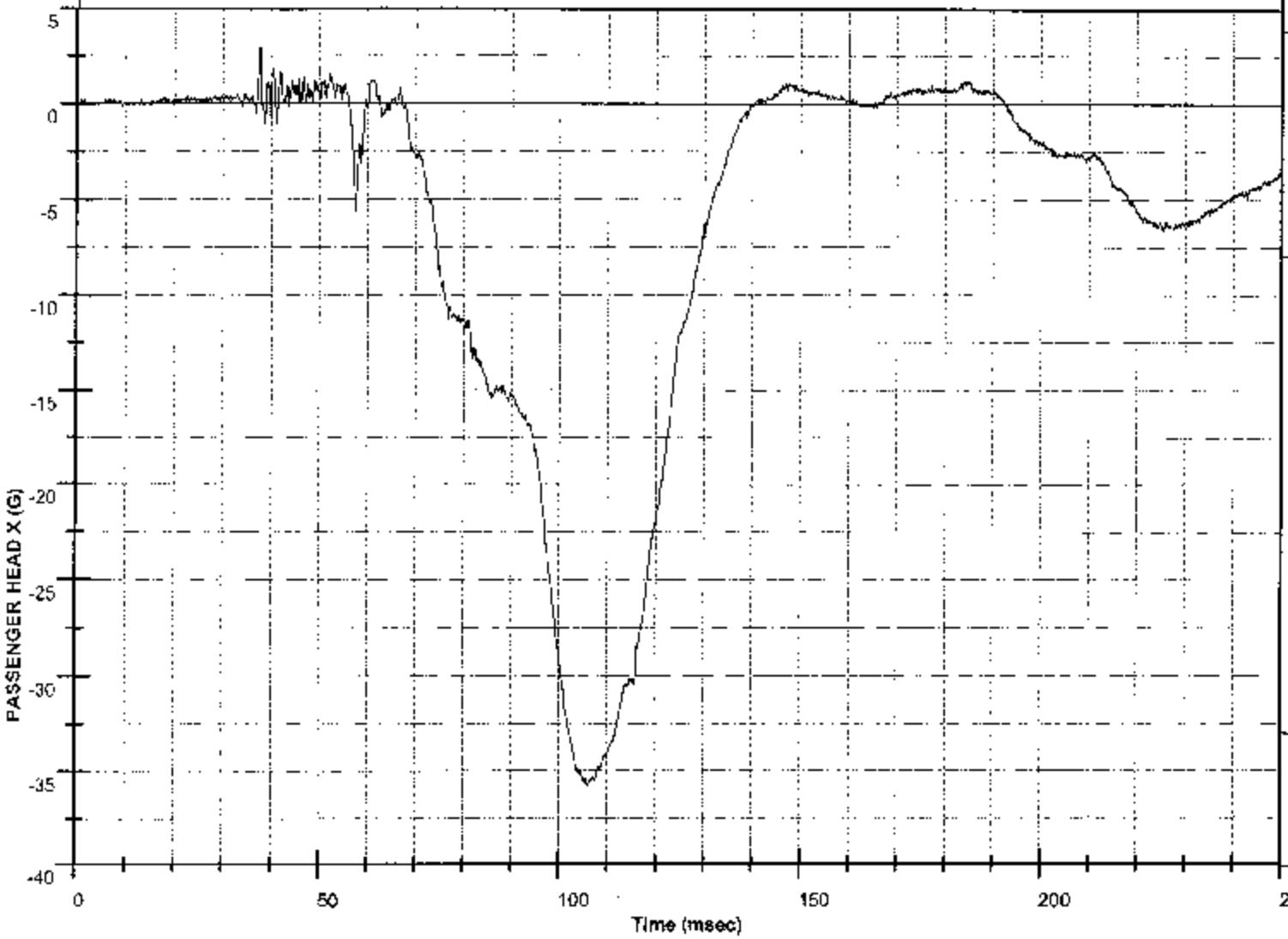

Plotted By: C. Gadberry

On: 09.24.2003 21:11:43

Test Desc: **FMVSS 208 SLED**

Component: **2002 TOYOTA AVALON 4 DOOR (C25111)**

TestNumber: **H03432**

Test Date: **09/17/03**

Chn Name: **PASSENGER HEAD Y**

CFC: **1000**

File Name: **H03432AT.A25**

Sensor S/N:**AGH69**

MGA Research Corp
Accelerator Sled Facility
5000 Warren Road,
Burlington, WI 53105
Ph #: 262-763-2705
Fax #: 262-763-0934

Maximum: **17.1 G**
Time: **74.9 msec**

Minimum: **-37.6 G**
Time: **73.5 msec**

Value at T0: **0.0 G**

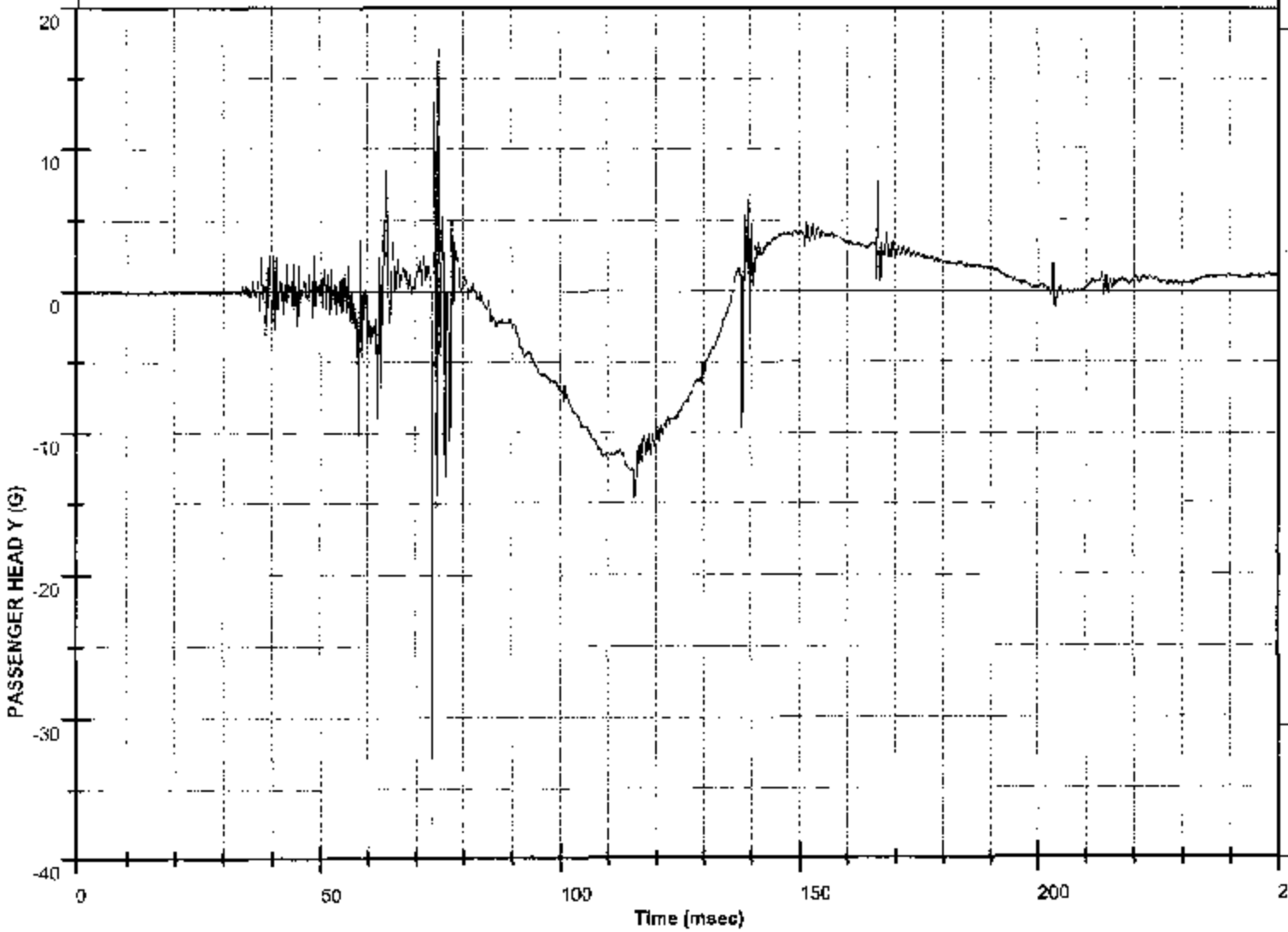

Plotted By: **C. Gadberry**

On: **09.24.2003 21:11:45**

Test Desc: FMVSS 208 SLED
Component: 2002 TOYOTA AVALON 4 DOOR (C25111)
TestNumber: H03432
Test Date: 09/17/03

Chn Name: PASSENGER HEAD Z
CFC: 1000
File Name: H03432AT.A26
Sensor S/N: AGH55

MGA Research Corp
Accelerator Sled Facility
5000 Warren Road,
Burlington, WI 53105
Ph #: 262-763-2705
Fax #: 262-763-0934

Maximum: 17.8 G
Time: 99.8 msec

Minimum: -12.3 G
Time: 129.6 msec

Value at T0: 0.0 G

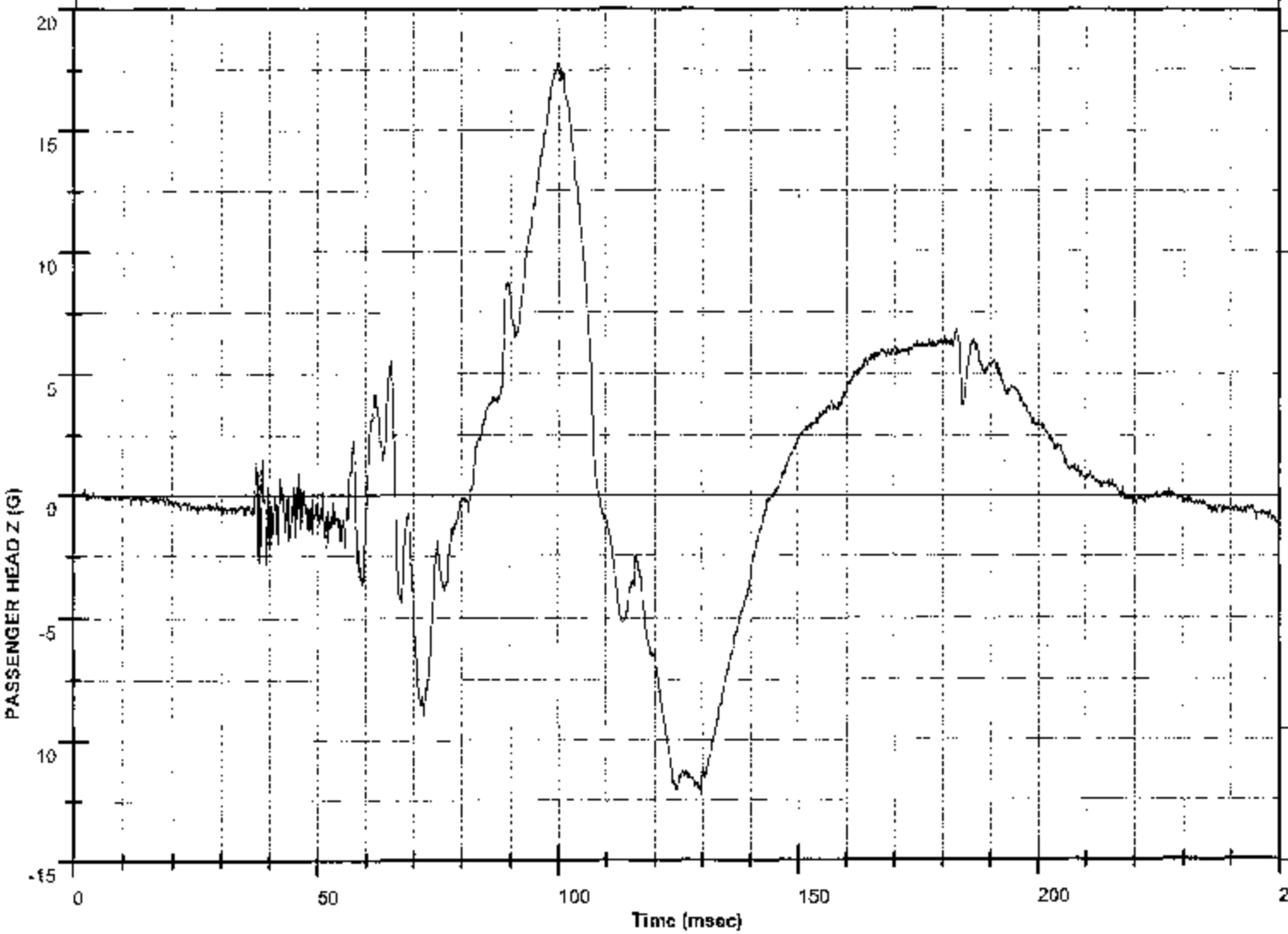

Plotted By: C. Gadberry
On: 09.24.2003 21:11:47

Test Desc: FMVSS 208 SLED

Component: 2002 TOYOTA AVALON 4 DOOR (C25111)

TestNumber: H03432

Test Date: 09/17/03

Chn Name: PASSENGER HEAD RESULTANT ACCELERATION

CFC: 1000

File Name: H03432AV.A24

Sensor S/N: AGH55

MGA Research Corp
Accelerator Sled Facility
5000 Warren Road,
Burlington, WI 53105
Ph #: 262-763-2705
Fax #: 262-763-0934

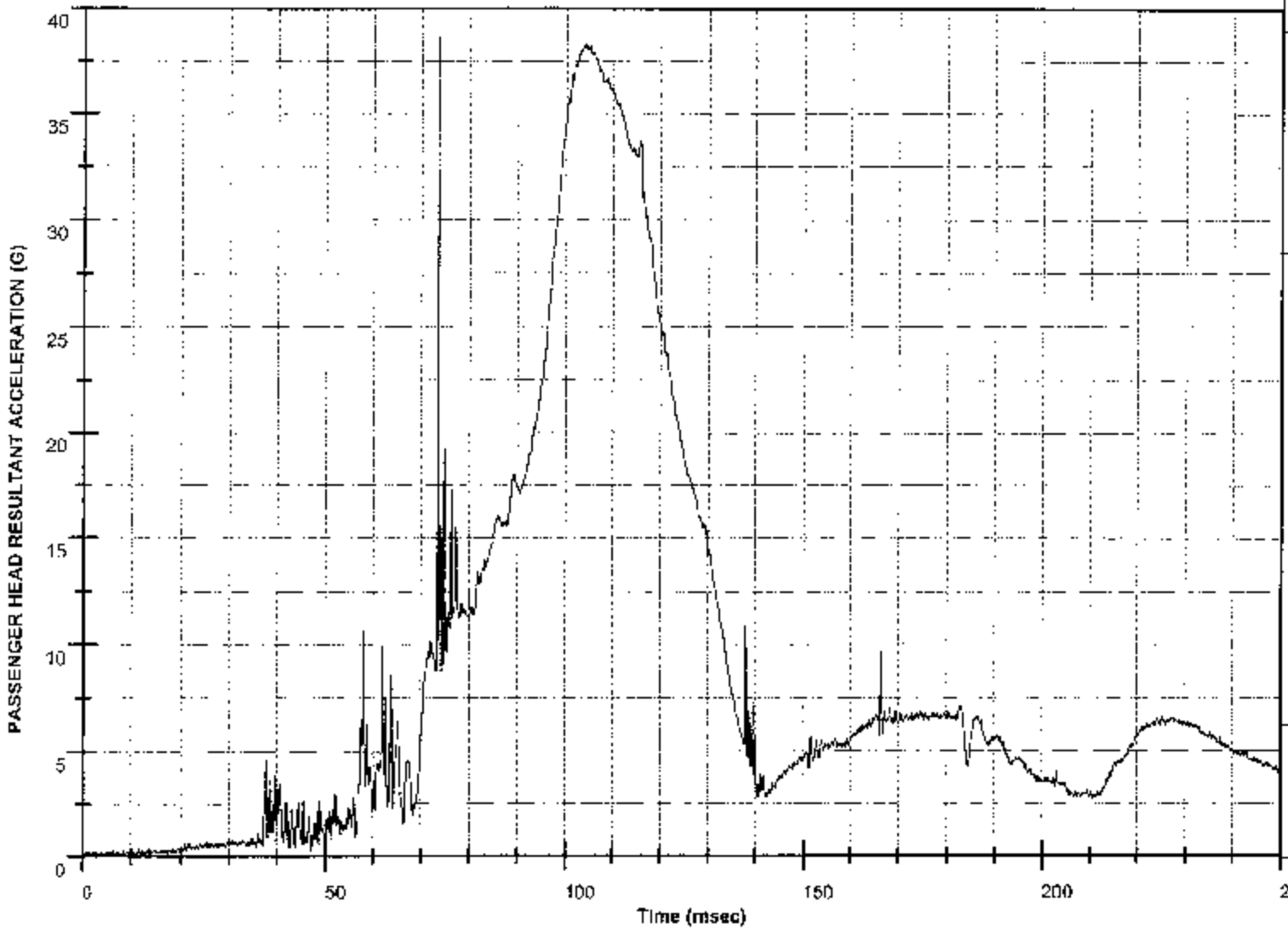

Maximum: 38.6 G
Time: 73.5 msec

Minimum: 0.0 G
Time: 0.0 msec

Value at T0: 0.0 G

HIC VAL: 167.9
T1: 88.7 msec
T2: 127.0 msec

HIC36 VAL: 167.9
T1: 91.6 msec
T2: 126.1 msec

HIC15 VAL: 118.4
T1: 99.4 msec
T2: 114.4 msec

Plotted By: C. Gadberry
On: 09.24.2003 21:11:50

Test Desc: FMVSS 208 SLED
Component: 2002 TOYOTA AVALON 4 DOOR (C25111)
TestNumber: H03432
Test Date: 09/17/03

Chn Name: PASSENGER NECK FX
CFC: 1000
File Name: H03432FT.F31
Sensor S/N: 1561FX

MGA Research Corp
Accelerator Sled Facility
5000 Warren Road,
Burlington, WI 53105
Ph #: 262-763-2705
Fax #: 262-763-0934

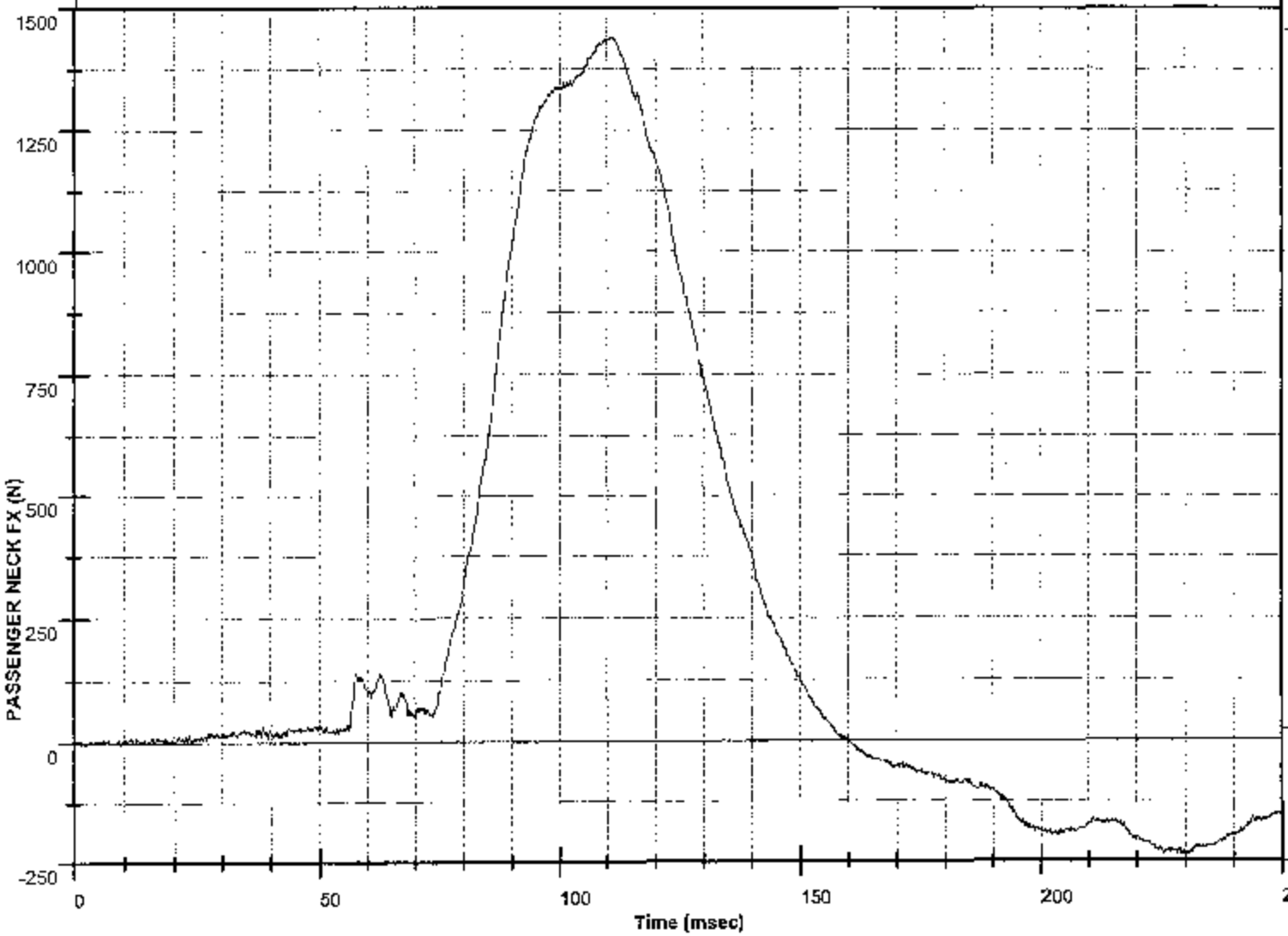

Maximum: 1,440.8 N
Time: 110.7 msec

Minimum: -236.7 N
Time: 225.5 msec

Value at T0: -0.1 N

Plotted By: C. Gadberry
On: 09.24.2003 21:11:52

Test Desc: FMVSS 208 SLED

Component: 2002 TOYOTA AVALON 4 DOOR (C25111)

TestNumber: H03432

Test Date: 09/17/03

Chn Name: PASSENGER NECK FY

CFC: 1000

File Name: H03432FT.F41

Sensor S/N: 1561FY

MGA Research Corp
Accelerator Sled Facility
5000 Warren Road,
Burlington, WI 53105
Ph #: 262-763-2705
Fax #: 262-763-0934

Maximum: 598.0 N
Time: 122.3 msec

Minimum: -90.6 N
Time: 207.4 msec

Value at T0: 5.9 N

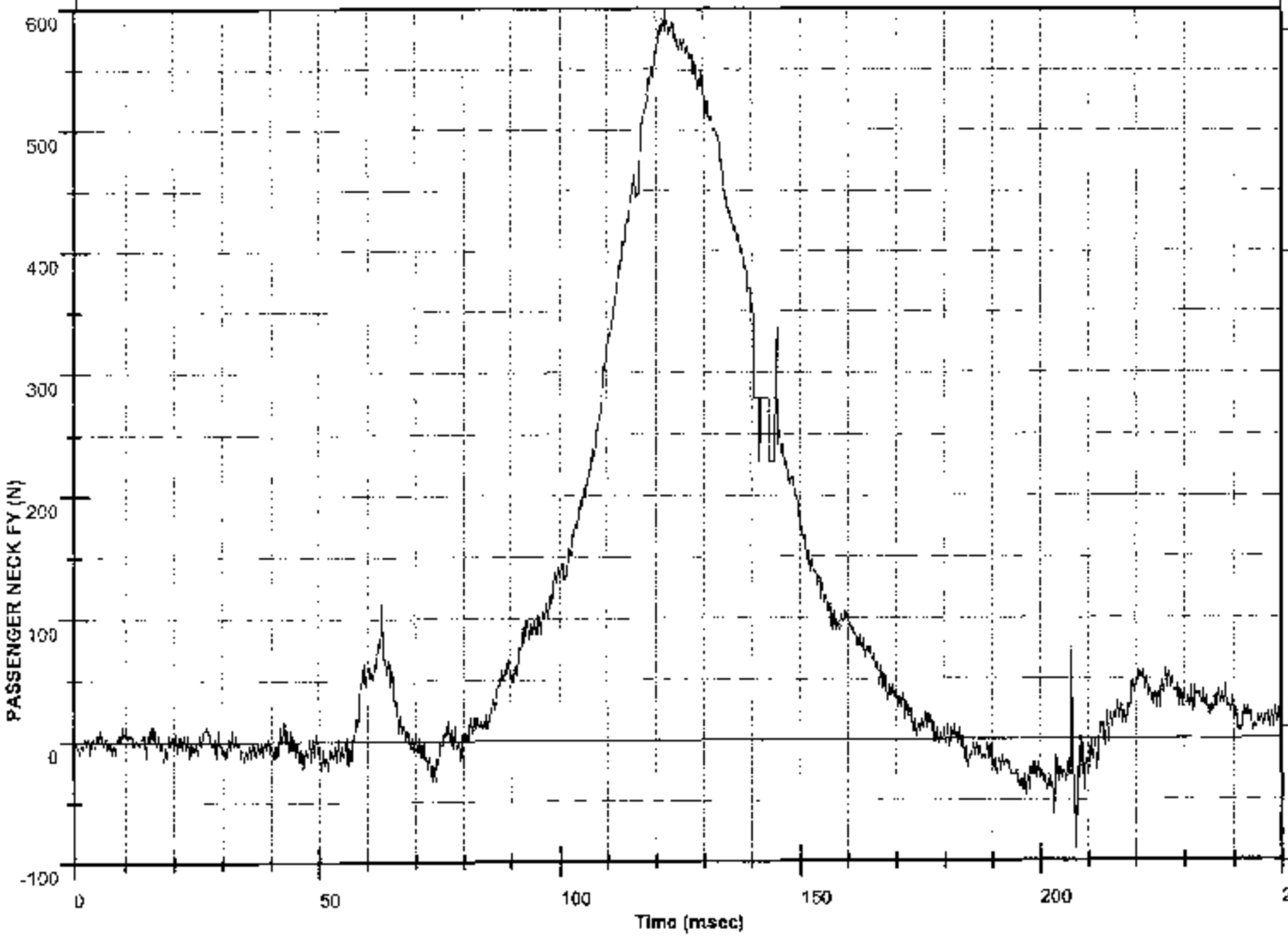

Plotted By: C. Gadberry

On: 09.24.2003 21:11:54

Test Desc: FMVSS 208 SLED

Component: 2002 TOYOTA AVALON 4 DOOR (C25111)

TestNumber: H03432

Test Date: 09/17/03

Chn Name: PASSENGER NECK FZ

CFC: 1000

File Name: H03432FT.F33

Sensor S/N: 1561FZ

MGA Research Corp
Accelerator Sled Facility
5000 Warren Road,
Burlington, WI 53105
Ph #: 262-763-2705
Fax #: 262-763-0934

Maximum: 362.2 N
Time: 65.3 msec

Minimum: -550.8 N
Time: 130.1 msec

Value at T0: -7.1 N

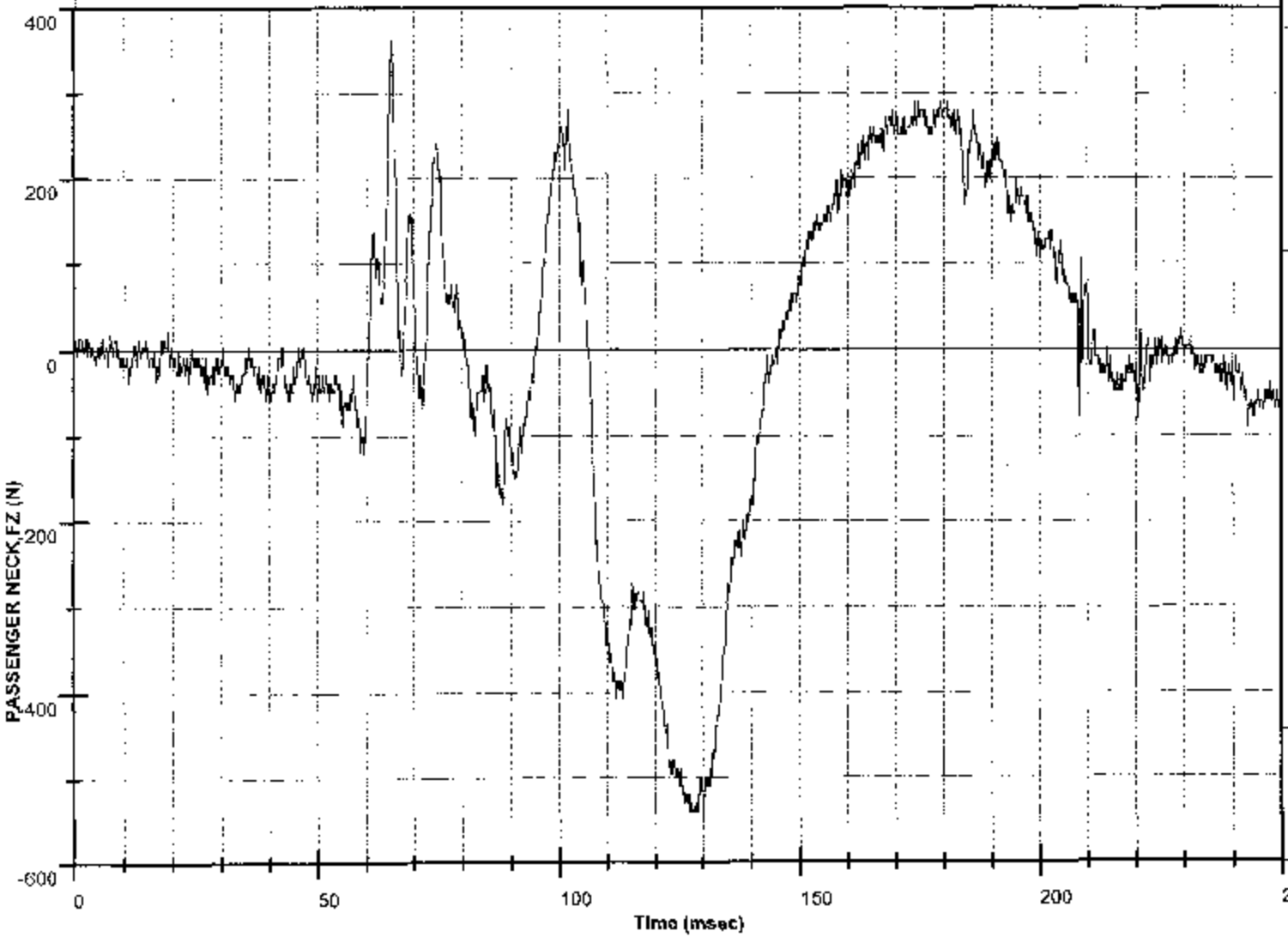

Plotted By: C. Gadberry

On: 09.24.2003 21:11:55

Test Desc: FMVSS 208 SLED

Component: 2002 TOYOTA AVALON 4 DOOR (C25111)

TestNumber: H03432

Test Date: 09/17/03

Chn Name: PASSENGER NECK MX

CFC: 600

File Name: H03432MF.M35

Sensor S/N: 1561MX

MGA Research Corp
Accelerator Sled Facility
5000 Warren Road,
Burlington, WI 53105
Ph #: 262-763-2705
Fax #: 262-763-0934

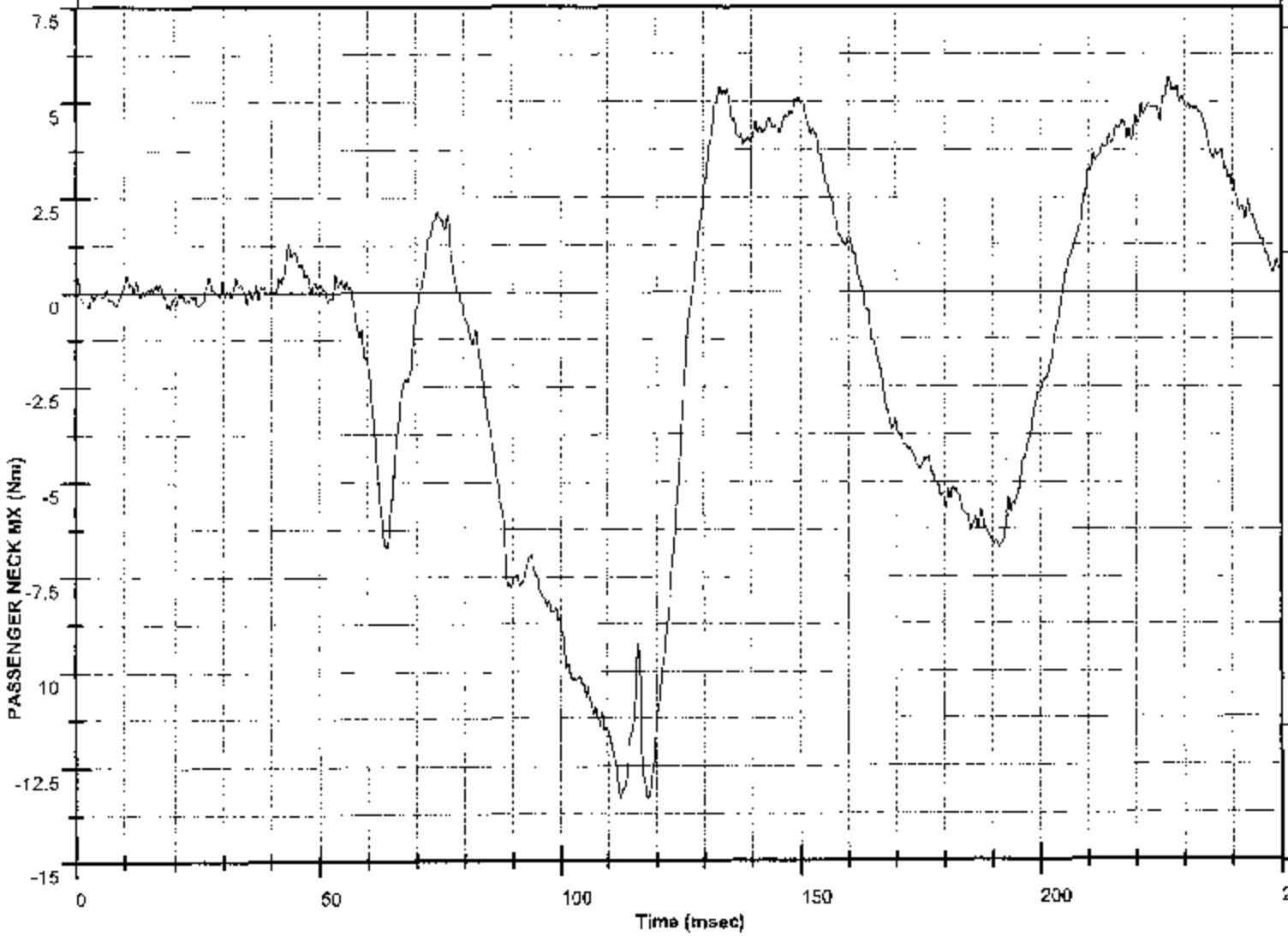

Maximum: 5.6 Nm
Time: 226.8 msec

Minimum: -13.4 Nm
Time: 118.1 msec

Value at T0: 0.1 Nm

Plotted By: C. Gadberry

On: 09.24.2003 21:11:57

Test Desc: FMVSS 208 SLED
Component: 2002 TOYOTA AVALON 4 DOOR (C25111)
TestNumber: H03432
Test Date: 09/17/03

Chn Name: PASSENGER NECK MY
CFC: 600
File Name: H03432MF.M36
Sensor S/N:1561MY

MGA Research Corp
Accelerator Sled Facility
5000 Warren Road,
Burlington, WI 53105
Ph #: 262-763-2705
Fax #: 262-763-0934

Maximum: 87.0 Nm
Time: 95.3 msec

Minimum: -13.0 Nm
Time: 163.0 msec

Value at T0: 0.0 Nm

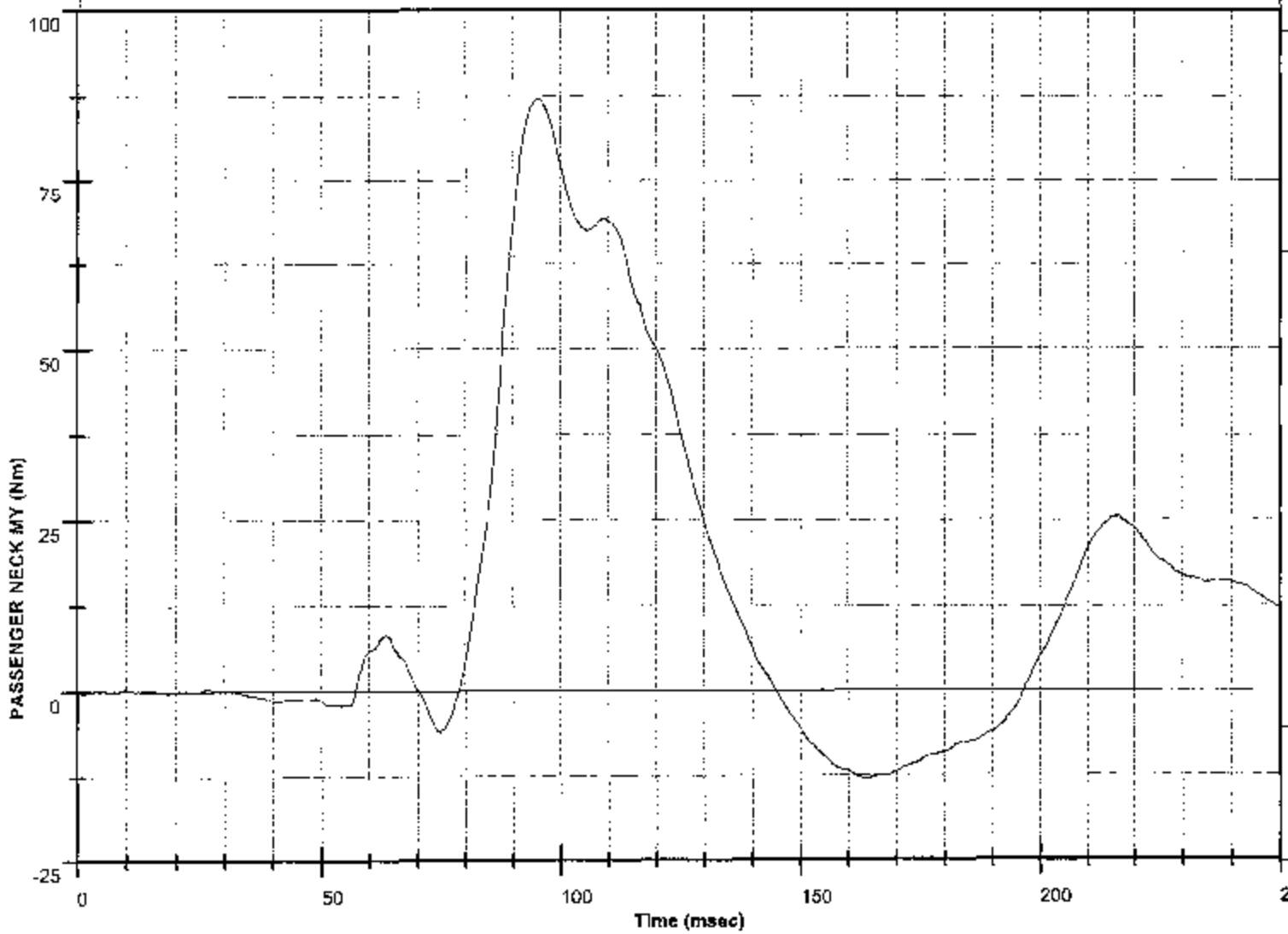

Plotted By: C. Gadberry
On: 09.24.2003 21:11:59

Test Desc: FMVSS 208 SLED

Component: 2002 TOYOTA AVALON 4 DOOR (C25111)

TestNumber: H03432

Test Date: 09/17/03

Chn Name: PASSENGER NECK MZ

CFC: 600

File Name: H03432MF.M37

Sensor S/N:1561MZ

MGA Research Corp
Accelerator Sled Facility
5000 Warren Road,
Burlington, WI 53105
Ph #: 262-763-2705
Fax #: 262-763-0934

Maximum: 33.8 Nm
Time: 137.0 msec

Minimum:-18.9 Nm
Time: 213.1 msec

Value at T0: 0.0 Nm

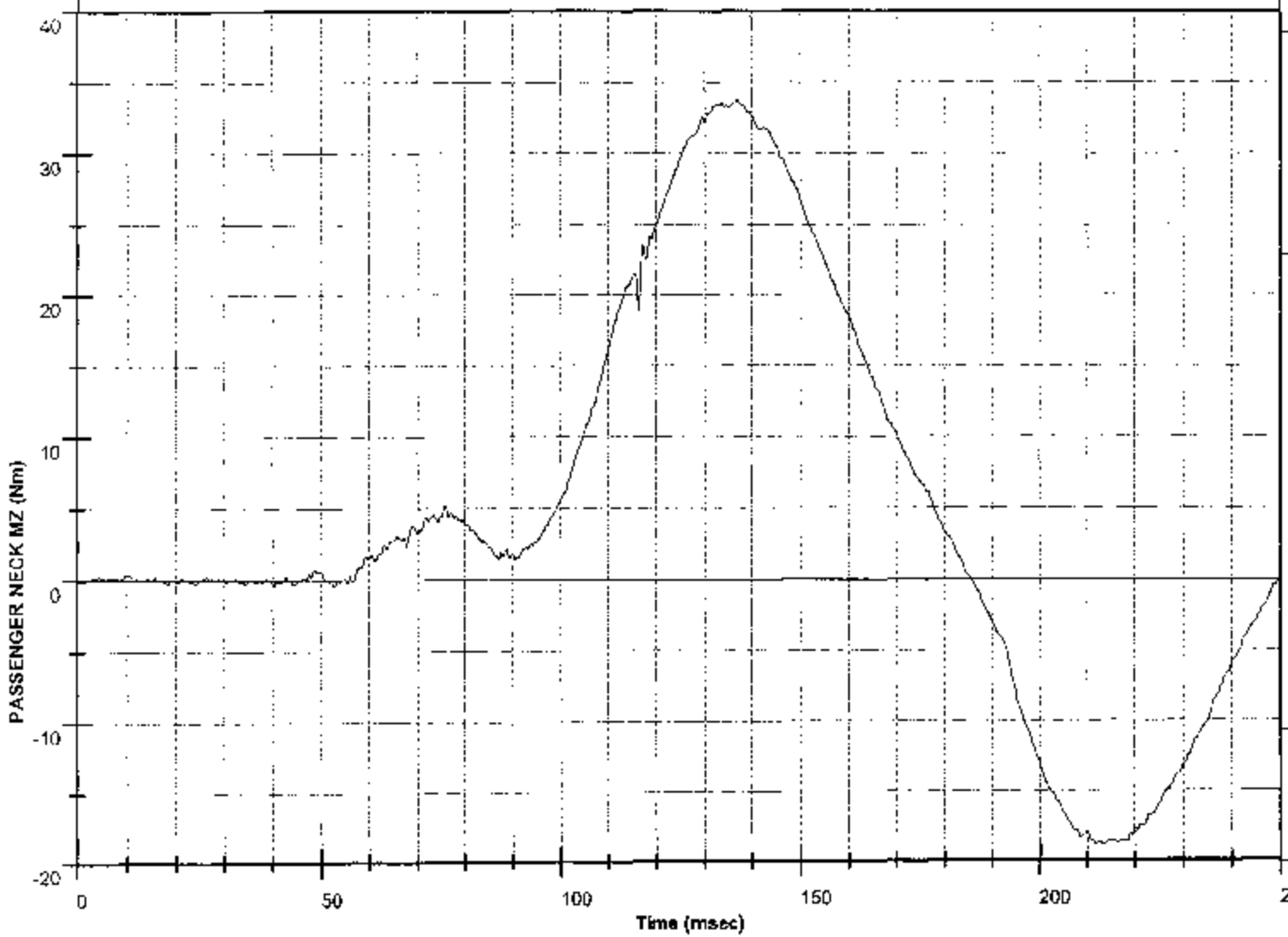

Plotted By: C. Gadberry

On: 09.24.2003 21:12:01

Test Desc: FMVSS 208 SLED

Component: 2002 TOYOTA AVALON 4 DOOR (C25111)

TestNumber: H03432

Test Date: 09/17/03

Chn Name: PASSENGER OCCIPITAL CONDYLE MOMENT Y

CFC: 600

File Name: H03432MO.M36

Sensor S/N: 1561MY

MGA Research Corp
Accelerator Sled Facility
5000 Warren Road,
Burlington, WI 53105
Ph #: 262-763-2705
Fax #: 262-763-0934

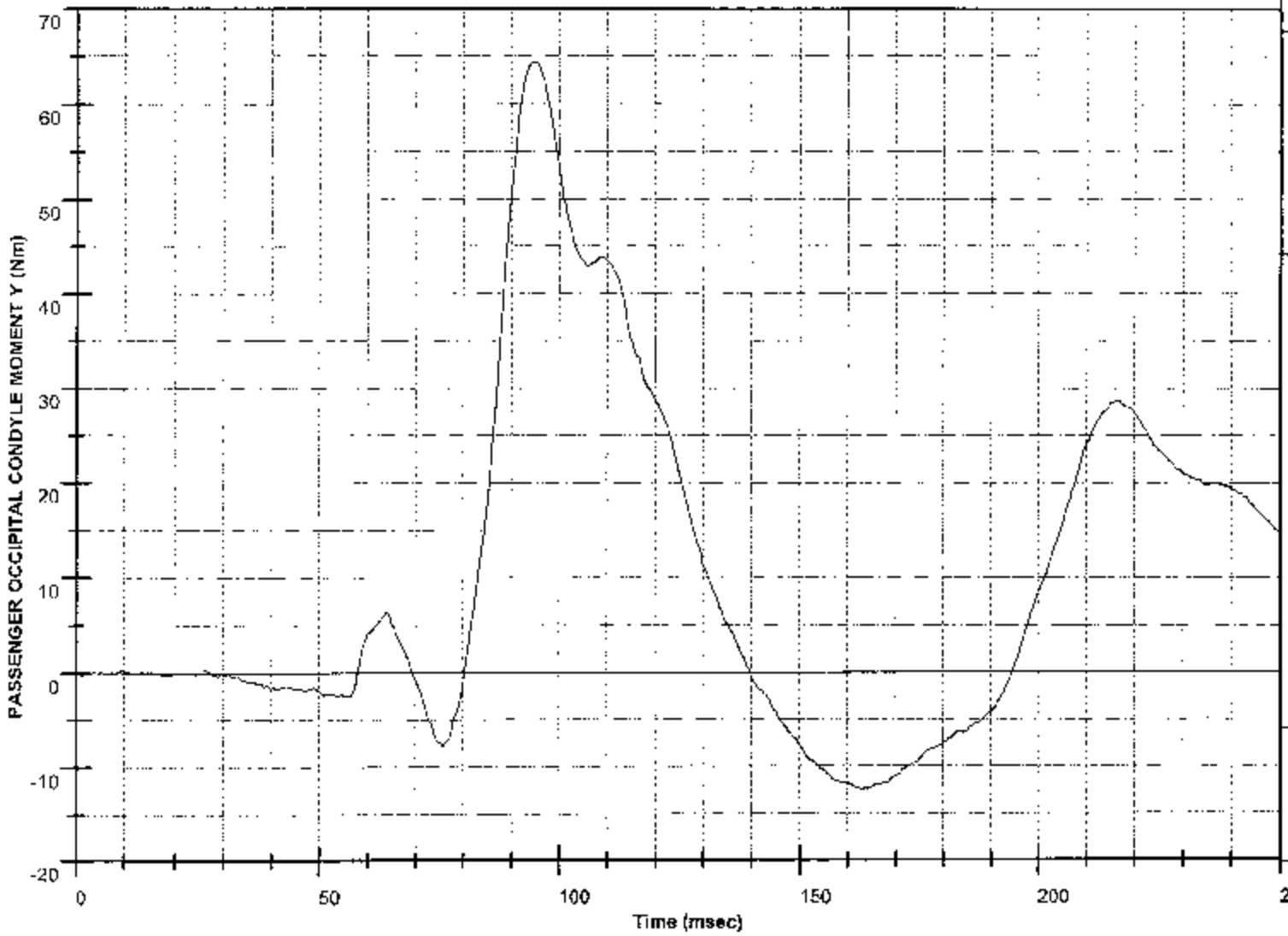

Maximum: 64.4 Nm
Time: 95.2 msec

Minimum: -12.6 Nm
Time: 163.0 msec

Value at T0: 0.0 Nm

Plotted By: C. Gadberry

On: 09.24.2003 21:12:03

Test Desc: **FMVSS 208 SLED**

Component: **2002 TOYOTA AVALON 4 DOOR (C25111)**

TestNumber: **H03432**

Test Date: **09/17/03**

Chn Name: **PASSENGER CHEST X**

CFC: **180**

File Name: **H03432AF.A27**

Sensor S/N: **C12883**

MGA Research Corp
Accelerator Sled Facility
5000 Warren Road,
Burlington, WI 53105
Ph #: 262-763-2705
Fax #: 262-763-0934

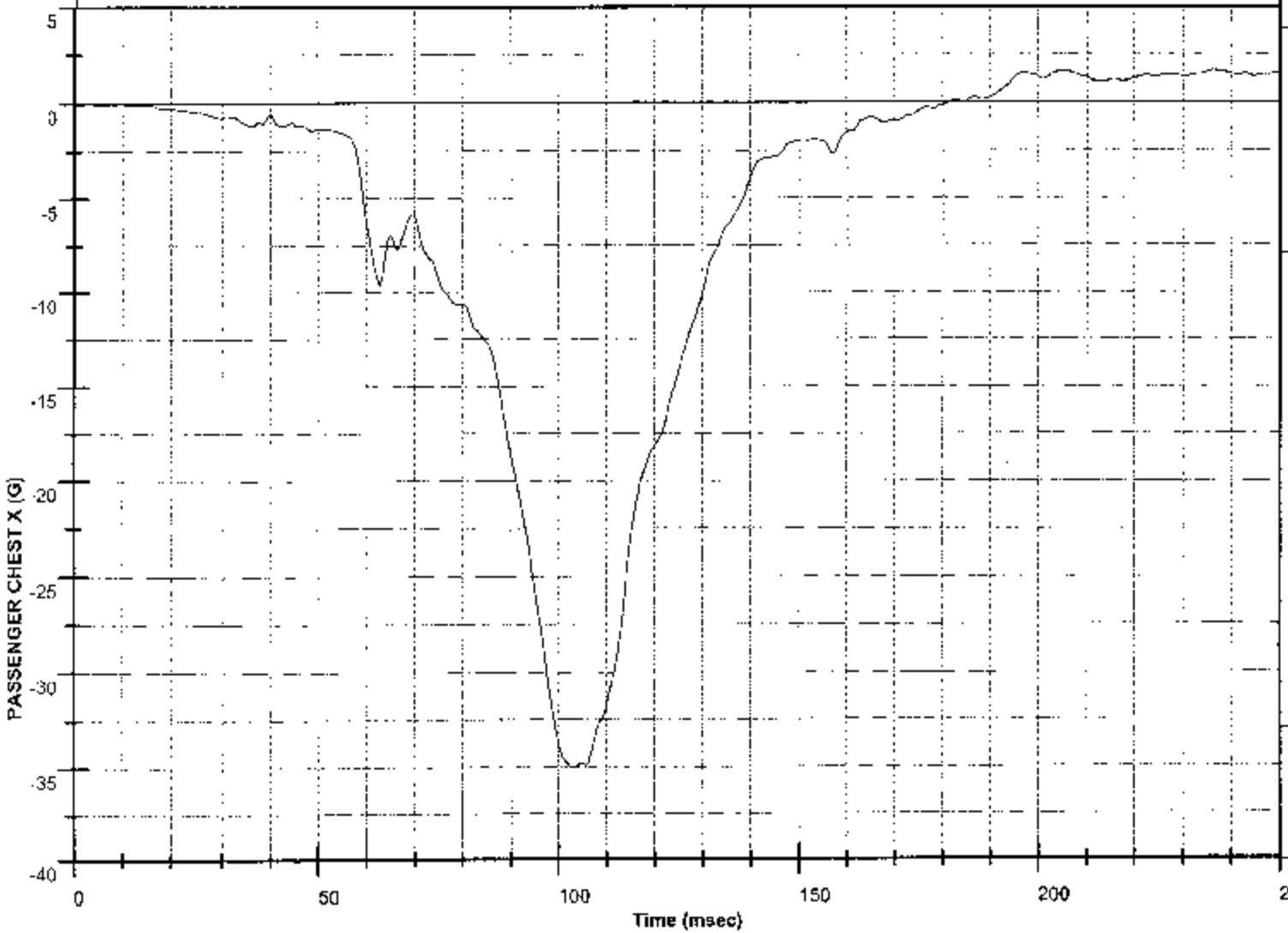

Maximum: **1.7 G**
Time: **236.3 msec**

Minimum: **-35.0 G**
Time: **102.8 msec**

Value at T0: **-0.0 G**

Plotted By: **C. Gadberry**

On: **09.24.2003 21:12:05**

Test Desc: FMVSS 208 SLED

Component: 2002 TOYOTA AVALON 4 DOOR (C25111)

TestNumber: H03432

Test Date: 09/17/03

Chn Name: PASSENGER CHEST Y

CFC: 180

File Name: H03432AF.A28

Sensor S/N: C13081

MGA Research Corp
Accelerator Sled Facility
5000 Warren Road,
Burlington, WI 53105
Ph #: 262-763-2705
Fax #: 262-763-0934

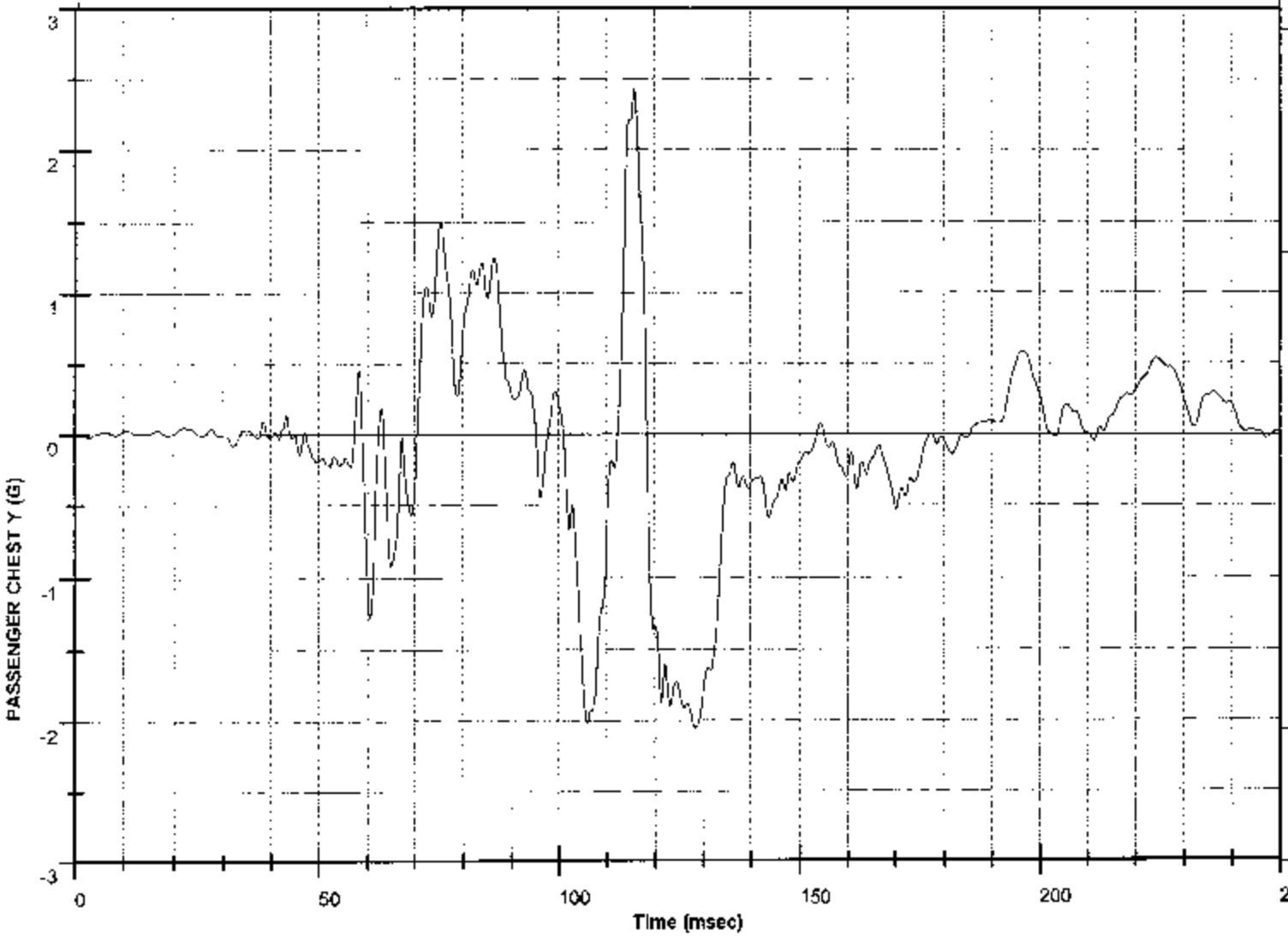

Maximum: 2.4 G
Time: 115.8 msec

Minimum: -2.1 G
Time: 128.4 msec

Value at T0: 0.0 G

Plotted By: C. Gadberry
On: 09.24.2003 21:12:07

Test Desc: FMVSS 208 SLED

Component: 2002 TOYOTA AVALON 4 DOOR (C25111)

TestNumber: H03432

Test Date: 09/17/03

Chn Name: PASSENGER CHEST Z

CFC: 180

File Name: H03432AF.A29

Sensor S/N:C12881

MGA Research Corp
Accelerator Sled Facility
5000 Warren Road,
Burlington, WI 53105
Ph #: 262-763-2705
Fax #: 262-763-0934

Maximum: 8.9 G
Time: 73.4 msec

Minimum:-18.7 G
Time: 101.1 msec

Value at T0: -0.0 G

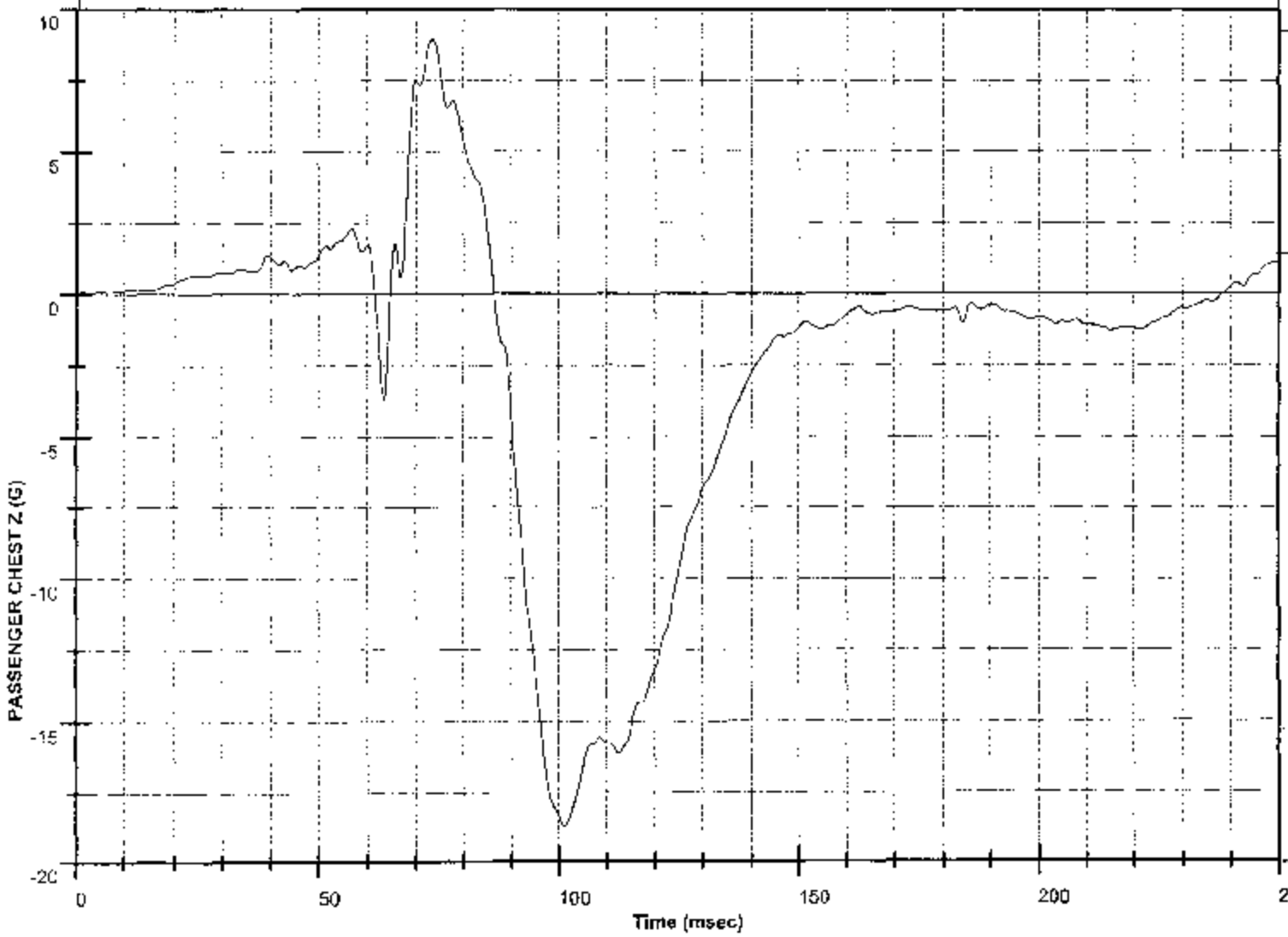

Plotted By: C. Gadberry

On: 09.24.2003 21:12:09

Test Desc: FMVSS 208 SLED

Component: 2002 TOYOTA AVALON 4 DOOR (C25111)

TestNumber: H03432

Test Date: 09/17/03

Chn Name: PASSENGER CHEST RESULTANT ACCELERATION

CFC: 180

File Name: H03432AV.A27

Sensor S/N: C12881

MGA Research Corp
Accelerator Sled Facility
5000 Warren Road,
Burlington, WI 53105
Ph #: 262-763-2705
Fax #: 262-763-0934

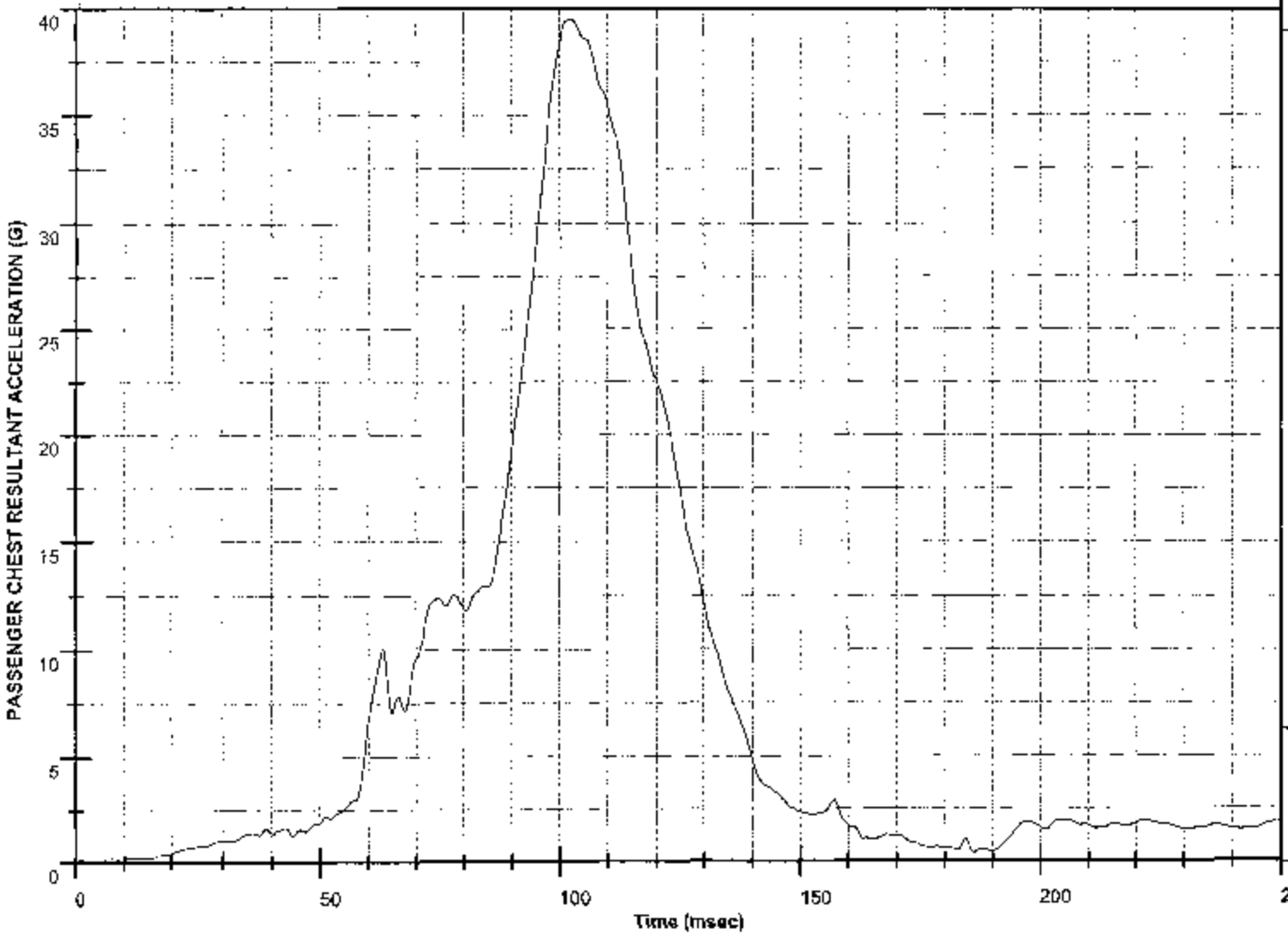

Maximum: 39.5 G
Time: 102.4 msec

Minimum: 0.0 G
Time: 0.1 msec

Value at T0: 0.0 G

Plotted By: C. Gadberry

On: 09.24.2003 21:12:11

Test Desc: FMVSS 208 SLED

Component: 2002 TOYOTA AVALON 4 DOOR (C25111)

TestNumber: H03432

Test Date: 09/17/03

Chn Name: PASSENGER CHEST DISPLACEMENT

CFC: 600

File Name: H03432DF.D39

Sensor S/N:340

MGA Research Corp
Accelerator Sled Facility
5000 Warren Road,
Burlington, WI 53105
Ph #: 262-763-2705
Fax #: 262-763-0934

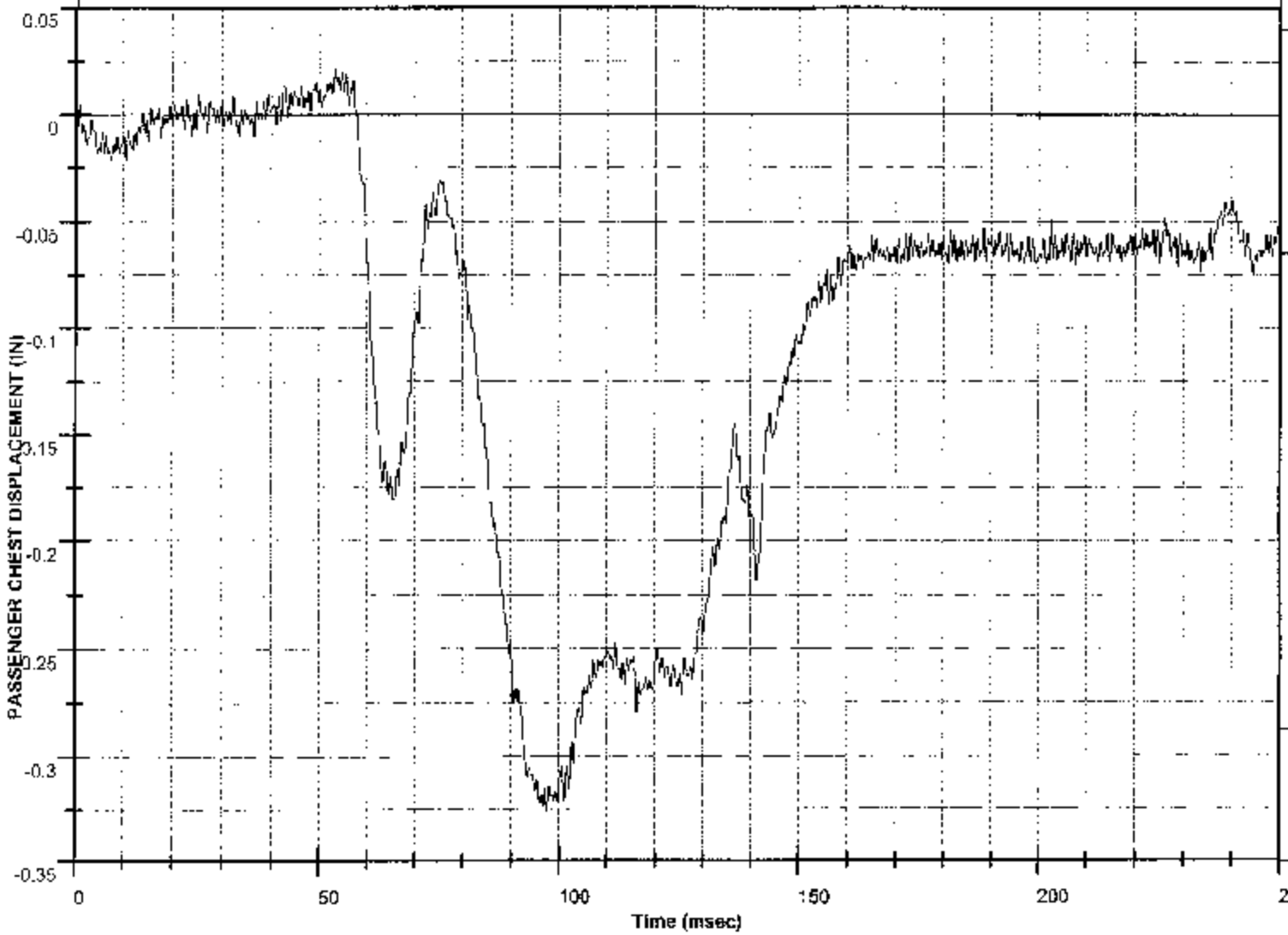

Maximum: 0.0 IN
Time: 53.2 msec

Minimum: -0.3 IN
Time: 97.5 msec

Value at T0: 0.0 IN

Plotted By: C. Gadberry

On: 09.24.2003 21:12:13

Test Desc: FMVSS 208 SLED

Component: 2002 TOYOTA AVALON 4 DOOR (C25111)

TestNumber: H03432

Test Date: 09/17/03

Chn Name: PASSENGER LEFT FEMUR

CFC: 600

File Name: H03432FF.F51

Sensor S/N: 946

MGA Research Corp
Accelerator Sled Facility
5000 Warren Road,
Burlington, WI 53105
Ph #: 262-763-2705
Fax #: 262-763-0934

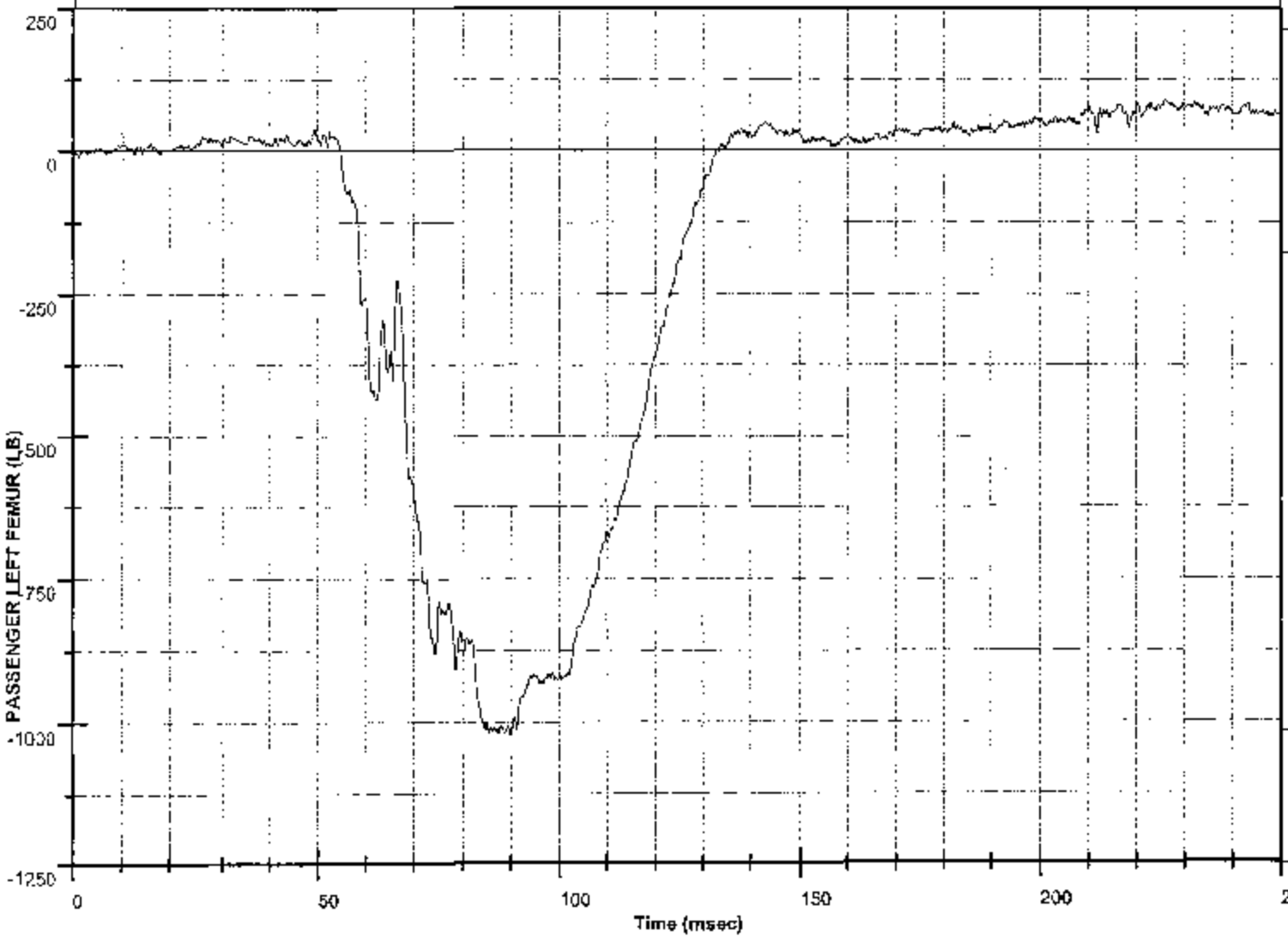

Maximum: 89.3 LB
Time: 226.1 msec

Minimum: -1,023.3 LB
Time: 90.0 msec

Value at T0: 10.2 LB

Plotted By: C. Gadberry

On: 09.24.2003 21:28:20

Test Desc: FMVSS 208 SLED
Component: 2002 TOYOTA AVALON 4 DOOR (C25111)
TestNumber: H03432
Test Date: 09/17/03

Chn Name: PASSENGER RIGHT FEMUR
CFC: 600
File Name: H03432FF.F52
Sensor S/N:945

MGA Research Corp
Accelerator Sled Facility
5000 Warren Road,
Burlington, WI 53105
Ph #: 262-763-2705
Fax #: 262-763-0934

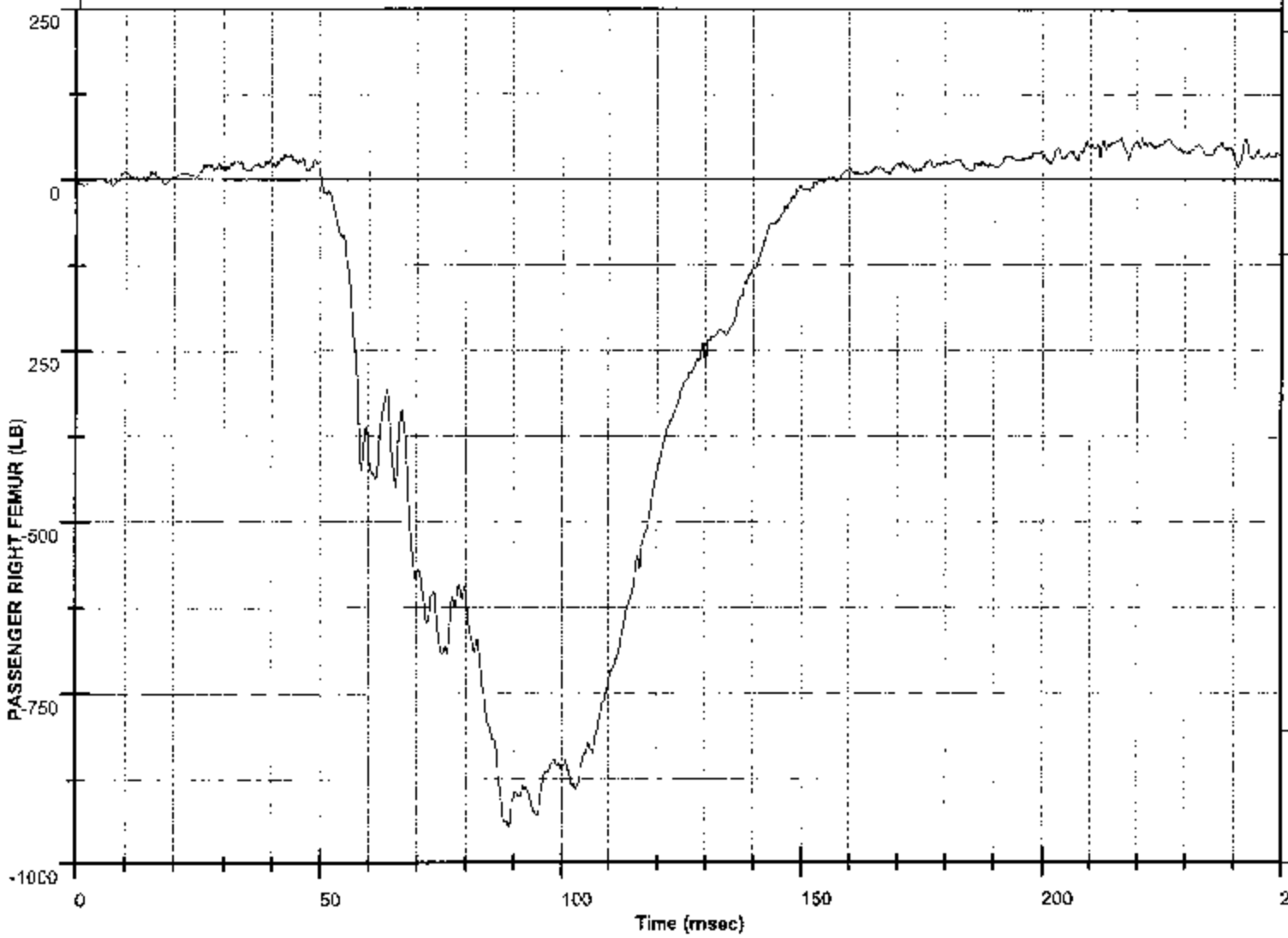

Maximum: 62.3 LB
Time: 220.9 msec

Minimum: -946.6 LB
Time: 88.9 msec

Value at T0: 2.9 LB

Plotted By: C. Gadberry
On: 09.24.2003 21:28:22

APPENDIX C

MANUFACTURER'S VEHICLE INFORMATION

TOYOTA

TOYOTA MOTOR NORTH AMERICA, INC.

WASHINGTON OFFICE
1850 M STREET, NW, SUITE 600, WASHINGTON, DC 20036

TEL: (202) 775-1707
FAX: (202) 463-8513

November 2, 2001

Ms. Marilynne Jacobs
Director, Office of Vehicle Safety Compliance
National Highway Traffic Safety Administration
400 Seventh Street, S.W. (NSA-31), Rm. 6111
Washington, D.C. 20590

Re: 2002 Toyota Camry, Sienna, Avalon, Tacoma FMVSS208 Information
[NSA-31CCa/OA-208-010924U, V, W, X]

Dear Ms Jacobs:

On behalf of Toyota Motor Corporation (TMC), I am submitting the attached information in response to your September 28, 2001 letter [NSA-31CCa/OA-208-010924U, V, W, X].

Should you have any questions about this report, please contact Mr. Mitch Kato at (202) 775-1707.

Sincerely,

Chris Tinto
Director
TOYOTA MOTOR NORTH AMERICA, INC.

CT:mk
Attachment

TOYOTA'S RESPONSE TO
NHTSA'S REQUEST ON FMVSS No. 208 FOR
THE 2002 TOYOTA AVALON
(NSA-31CCa, OA-208-010924-W)

Q.1. Please inform OVSC to which sections of FMVSS No.208 the subject vehicle is certified with respect to dynamic tests in which seat belts are fastened and seat belts are unfastened. Provide a copy of the certification test reports for all the applicable impact tests with regard to the these sections.

Response 1.

The air bag restraint system of the 2002 Toyota Avalon meets the requirements of S13 of FMVSS No. 208.

We provide the summary reports for frontal barrier impact test with the safety manual belts fastened at 35mph as Attachment I-1 and the sled test with only the automatic restraint system are provided as Attachment I-2. And we provide the technical analysis reports for estimation of 30mph belted test results as Attachment I-3 and Attachment I-4.

Q.2. Provide the following: (1)describe the difference between the MY 2002 air bag system and the MY 2001 air bag system, (2) explain what other restraint changes have been made, (3) explain what other vehicle changes have been made that might have affected of FMVSS No.208 performance, and (4) describe any features that might affect performance with respect to children and out of position.

Response 2

Since Toyota Avalon is not a new design vehicle/model, the following information are provided;

(1) Difference is following.

(a) Driver side : (1)Bag Coating
(2)Vent-Hole Size

(b) Passenger side : Nothing

(2) No other restraint changes.

(3) No other vehicle changes, that might have affected FMVSS208 performance

(4) No features, that might affect performance with respect to children and out of position.

Q.3. If the vehicle was certified with unrestrained dummies to meet the requirements of S13, describe how to disconnect the air bags from the vehicle sensors and connect them to the triggering mechanism used in the sled test. Describe the method used in certification to determine when to trigger the air bag and the system used to trigger the air bag.

For air bags with dual stage or multistage inflators describe when the stages are triggered and provide data to show that this is similar to what would occur in a crash of similar severity.

Response 3

We provide the illustration which shows the location of the air bag connector to disconnect the air bag as Attachment II-1.
And we describe the air bag triggering system used in certification test in Attachment II-2.

Air bag with dual stage or multistage inflators is not used in the 2002 Toyota Avalon.

Q.4. State for any safety belt system in this vehicle whether or not it is equipped with a tension-relieving device. Provide a copy of the information furnished in accordance with S7.4.2 if the tension-relieving device is used.

Response 4

Tension-relieving device is not used in the 2002 Toyota Avalon

Q.5. FMVSS No. 208, S8.1.5 allows the manufacturer the option of having movable vehicle windows and vents placed in the closed position. State whether the vehicle's movable windows and vents were opened or closed for the certification tests.

Response 5

Both sides of the front and rear windows were opened during the tests.

Q.6. Submit dummy placement measurements, including diagrams or photographs which show exactly where measurements were taken. Enclosed is a diagram of some of OVSC's dummy measurements. Where possible, use the dimension shown in the diagram to provide the individual dummy placement measurements.

Response 6

The dummy placement measurement data in the OVSC form is provided in Attachment III, and in addition, we provide our diagrams and measurement data in section 11 of Attachment IV-1.

Q.7. State whether the vehicle has a foot rest for the driver.

Response 7
A foot rest is provided for the driver

Q.8. Provide the seat positioning, steering column positioning, and fuel tank data on the enclosed form. If more than one front seating, steering column or fuel tank configuration are available on this vehicle, provide separate information for each. In addition, provide the seating reference point for each seat for the lockable seat belt requirement in S7.1.1.5.

Response 8
We provide the seat positioning, steering column positioning, and fuel tank data as Attachment IV-1, and the seating reference point for each seat as below matrix.

seat type	Attachment No
separate	IV-2
bench	IV-3

Q.9. If the vehicle is equipped with adjustable seat belt anchorages, provide the manufacturer's nominal design position for a 50th percentile adult male occupant.

Response 9
See section 8 of the Attachment IV-1.

Q.10. For all certification barrier tests, provide the speed at impact, vehicle test weight, and resulting injury criteria (i.e., HIC, chest acceleration, chest compression, and femur loads, and where applicable neck moments and forces). For all certification sled tests, provide the resulting injury criteria (i.e., HIC, chest acceleration, chest compression, femur loads, and neck moments and forces).

Response 10
We provide the speed at impact, vehicle test weight, and resulting injury criteria recorded for each certification test in Attachment I-1 through I-2 in response to your request No.1.

Q.11. When vehicle components must be removed to obtain the proper test weight for the barrier test, what components do you recommend for removal and in what priority order do you recommend removal?

Response 11
The recommended parts for vehicle weight adjustment are listed in Attachment V.

Q.12. If the vehicle uses a pressure vessel to inflate the air bag, provide a copy of the test reports or engineering analysis to demonstrate that it meets all the requirements S9.1.

Response 12

We provide the approval letters of Research and Special Program Administration as Attachment VI-1 for the passenger's air bag.

Q.13. If the vehicle uses an explosive device to inflate the air bag, provide a copy of the test report or engineering analysis to demonstrate that it meets all the requirements of S9.2

Response 13

We provide the approval letters of Research and Special Program Administration as Attachment VI-2 for the driver's air bag.

Attachment 1-1
Report No. : T0105-0827
Report Date : May. 18. 2001

FMVSS 208 "Occupant Crash Protection" Compliance Test
for the 2002 Toyota AVALON (summary)

1. Test Date : January. 20. 2001

2. Test Location : Toyota Vehicle Safety Laboratory

3. Test Vehicle : 2002 Model Toyota AVALON

4. Test Condition :

4.1 Type of Test

☑ frontal , ☐ angular Left , ☐ angular Right , ☐ Sled Test

4.2 Use of Manual or Automatic Belt

Driver : ☑ Yes , ☐ No

Passenger : ☑ Yes , ☐ No

4.3 Test Speed (or ΔV) : 56.5 km/h (35.3 mph)

4.4 Vehicle Weight : 1764 kg (3889 lbs)

5. Test Results

			Driver	Passenger
Head Injury Criterion (HIC)			674	520
Chest Deceleration (G's)			43.2	37.5
Chest Deflection mm(inch)			35.6 (1.4)	38.9 (1.5)
Femur Load kN(lbs)		Right	3.686 (828.1)	2.628 (590.7)
		Left	5.370 (1207.2)	3.235 (727.3)
Neck Injury	Flection Bending Moment(Nm)		31	30
	Extension Bending Moment(Nm)		31	27
	Axial Tension (N)		1762	967
	Axial Compression (N)		6	89
	Fore-and-Aft Shear (N)		689	525

Report No. : T0105-0828 (Driver side)
T9812-0367 (Passenger side)
Report Date : May. 18. 2001 (Driver side)
December. 8. 1998 (Passenger side)

FMVSS 208 "Occupant Crash Protection" Compliance Test
for the 2002 Toyota AVALON (summary)

1. Test Date : April. 4. 2001 (Driver side)
October. 28. 1998 (Passenger side)

2. Test Location : Toyota Vehicle Safety Laboratory

3. Test Vehicle : 2002 Model Toyota AVALON (Driver side)
2000 Model Toyota AVALON (Passenger side)

4. Test Condition :

4.1 Type of Test

☐ frontal , ☐ angular Left , ☐ angular Right , ☑ Sled Test

4.2 Use of Manual or Automatic Belt

Driver : ☐ Yes , ☑ No

Passenger : ☐ Yes , ☑ No

4.3 Test Speed (or ΔV) : 45.0km/h (28.0mph) ···Driver side
49.4km/h (30.7mph) ···Passenger side

4.4 Vehicle Weight : ————————

5. Test Results

			Driver	Passenger
Head Injury Criterion (HIC)			92	180
Chest Deceleration (G's)			37.8	43.8
Chest Deflection mm(inch)			27.5 (1.1)	14.6 (0.6)
Femur Load kN(lbs)		Right	6.183 (1390.1)	4.360 (980.1)
		Left	4.875 (1095.9)	3.616 (812.9)
Neck Injury	Flection Bending Moment(Nm)		67	120
	Extention Bending Moment(Nm)		31	15
	Axial Tension (N)		1261	383
	Axial Compression (N)		82	2730
	Fore-and-Aft Shear (N)		539	1889

THECNICAL ANALYSIS REPORT

Purpose

This analysis is to demonstrate that the conformity of an airbag equipped vehicle with the 30 mph angular vehicle impact criteria of the FMVSS 208 (with the manual belt fastened) can be judged by the 35 mph (NCAP) frontal crash test data and the non-belted FMVSS 208 (30 mph) test data.

Analysis

(1) HIC / Chest Deceleration / Chest Compression

Figure 1,2 and 3 Show the HIC, Chest Deceleration and Chest Compression value relation between 30 mph frontal / angular impact with manual belt and 35 mph frontal impact with manual belt.

In these Figures, one plot shows an injury data at 30 mph vehicle impact (frontal or right / left angular) on the vertical axis and shows the injury data at 35 mph frontal impact on the horizontal axis of one model vehicle.

In these Figures, the HIC, Chest Deceleration and Chest Compression of 35 mph frontal impact tests result larger than those of the 30 mph impacts.

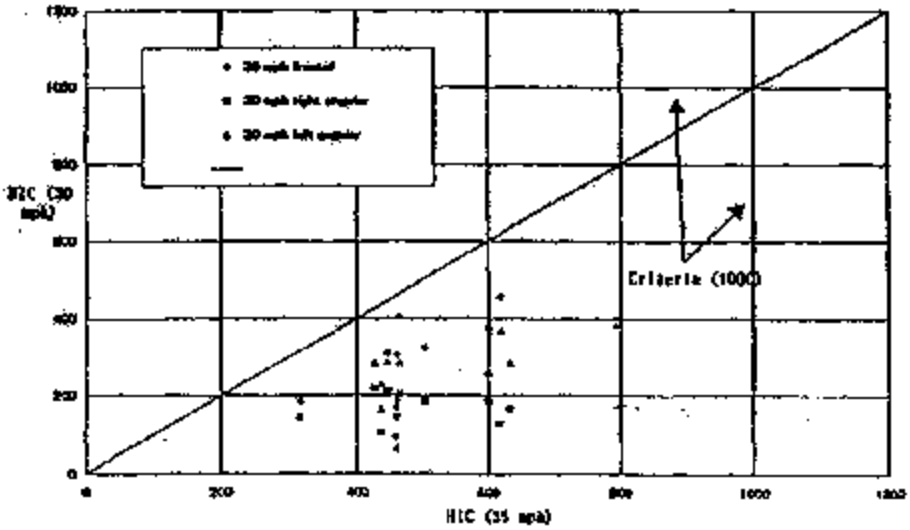

Figure 1

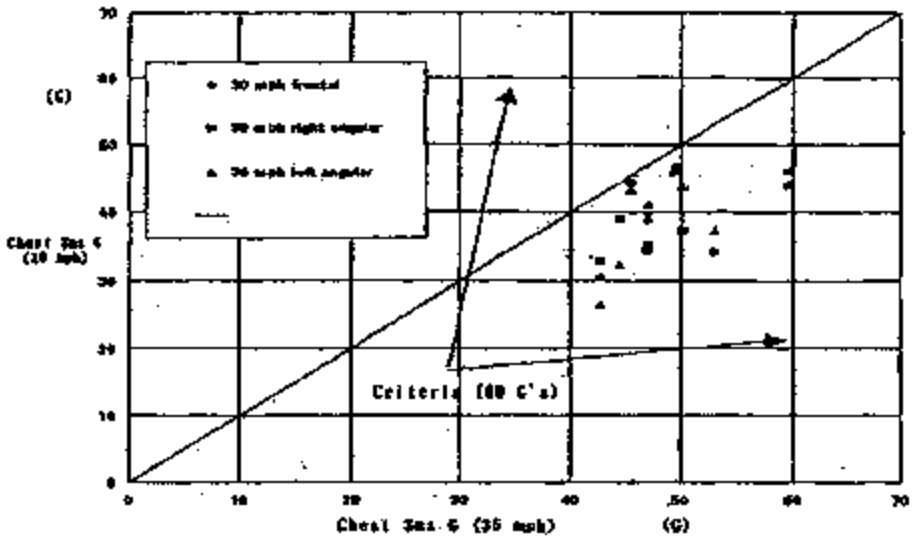

Figure 2

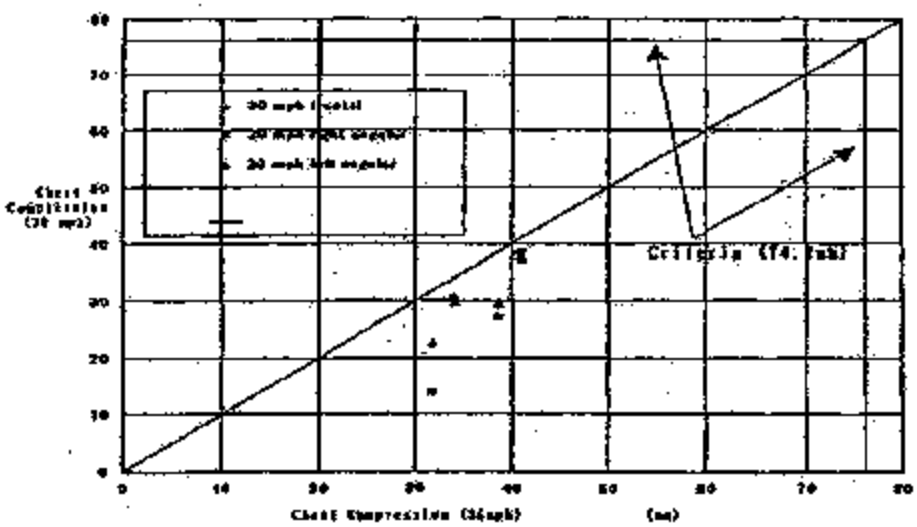

Figure 3

This relation is reasonable since those injury data basically depends upon the vehicle impact speed. Concerning the vehicle impact configuration difference between 35 mph frontal and 30 mph angular impact, the difference does not spoil (or affect) these injury data relation since the upper torso is always restrained by similar operation of the seat belt and the airbag during collision.

Therefore, we can conclude that a vehicle whose HIC, Chest Deceleration

And Chest Compression values were recorded less than the FMVSS 208 criteria in a 35 mph frontal impact test also satisfies the criteria in each of the 30 mph vehicle impact test (frontal / angular).

(2) Femur Load

The Figure 4 shows the femur load relation between belted 30 mph frontal / angular impact test and non-belted 30 mph frontal / angular impact test.

In the Figure, one plot shows a femur load with belt at 30 mph on the vertical axis and a femur load without belt at 30 mph on the horizontal axis of one model vehicle.

In the Figure, the femur load with manual belt results smaller than that without manual belt.

This relation is reasonable since the lower torso is restrained by the lap belt in the belted test and the forward movement of femur results smaller than that of the non-belted test.

Therefore, we can conclude that a vehicle whose femur load measurement was recorded less than 2250 lbs (1021 kgf) at 30 mph impact test without the manual belt also satisfies the FMVSS 208 criteria at 30 mph impact with the manual belt fastened.

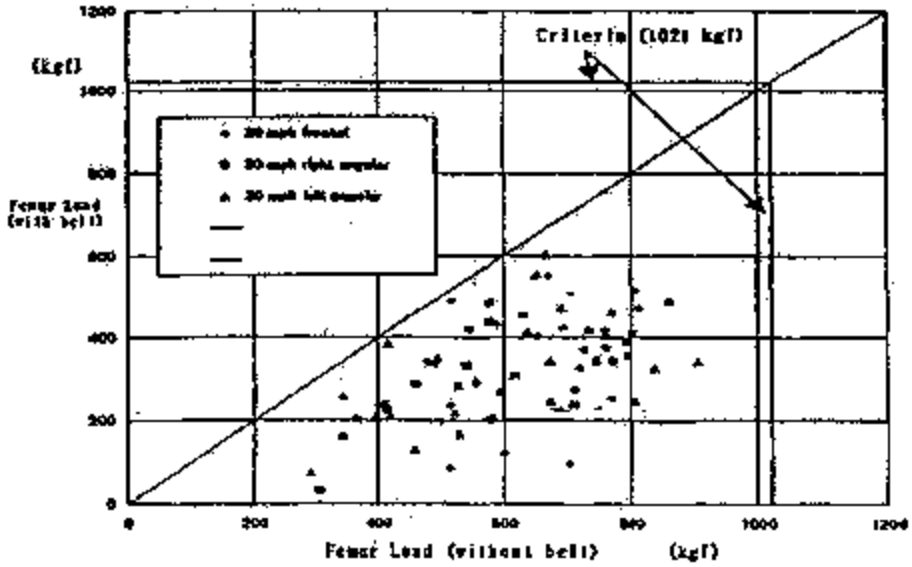

Figure 4

Conclusion

The conformity of airbag equipped vehicle with the 30 mph angular vehicle impact criteria of the FMVSS 208 (with the manual belt) can be judged by 35 mph (with belt) data and the non-belted FMVSS 208 (30 mph) test data as follow.

(1) HIC / Chest Deceleration / Chest Compression

If those injury data are recorded less than the FMVSS 208 criteria (HIC:1000, Chest 3msG:60, Chest Compression:3 inches) at 35 mph vehicle impact test, the vehicle can be judged to satisfy the FMVSS 208 criteria in 30 mph vehicle impact test with manual belt fastened.

(2) Femur Load

If the femur load is recorded less than 2250 lbs (1021 kgf) in a 30 mph non-belted impact test, the vehicle can be judged to satisfy the FMVSS 208 criteria in the 30 mph impact test with the manual belt fastened.

FMVSS 208 CONFORMITY TECHNICAL ANALISIS REPORT

– 2002 TOYOTA AVALON

1. Purpose

This analysis is due to determine whether the 2002 model TOYOTA AVALON complies with the FMVSS 208 injury criteria with the manual safety belt fastened or not by using the 35 mph vehicle impact test data and the femur load data obtained in the 30 mph sled test without the manual belt.

2. Data Check

No.	Injury Criteria	FMVSS 208 Criteria	35 mph test data		pass/fail
			Driver	Passenger	
1	HIC	1000	674	520	pass
2	Chest 3ms G	60 G's	43.2	37.5	pass
3	Chest Compression	3 inches	1.4	1.5	pass
4	Femur Load without seat belt		30 mph test data		
			Driver	Passenger	
	(1)Left Femur	2250 lbs	1096	813	pass
	(2)Right Femur	2250 lbs	1390	980	pass

3. Conclusion

The 2002 model TOYOTA AVALON can satisfy the FMVSS 208 injury criteria with its manual safety belt fastened

LOCATION AND DISCONNECTION OF THE AIRBAG CONNECTOR

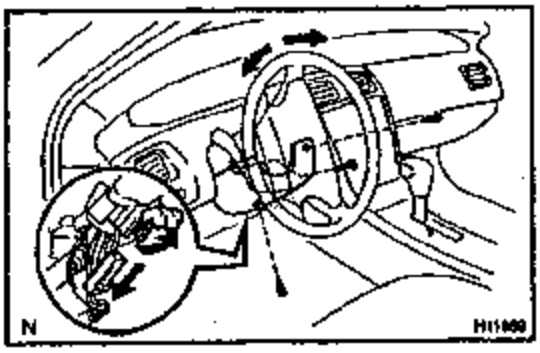

DRIVER SIDE AIRBAG

(1)Remove the 3 screws and steering column lower cover as shown in the illustration.

(2)Disconnect the airbag connector of the spiral cable.

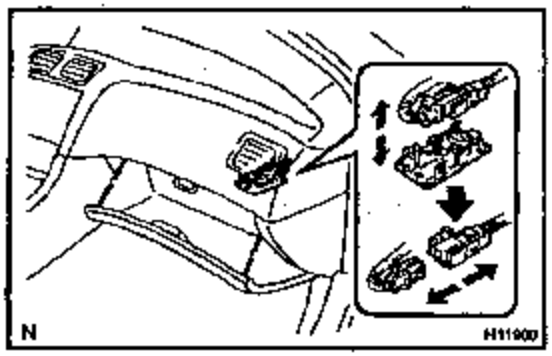

PASSENGER SIDE AIRBAG

(1)Pry out the glove compartment door finish plate inside the lower panel.

(2)Remove the connector from the glove compartment door finish plate.

(3)Disconnect the airbag connector.

AIR BAG TRIGGERING SYSTEM FOR SLED TEST

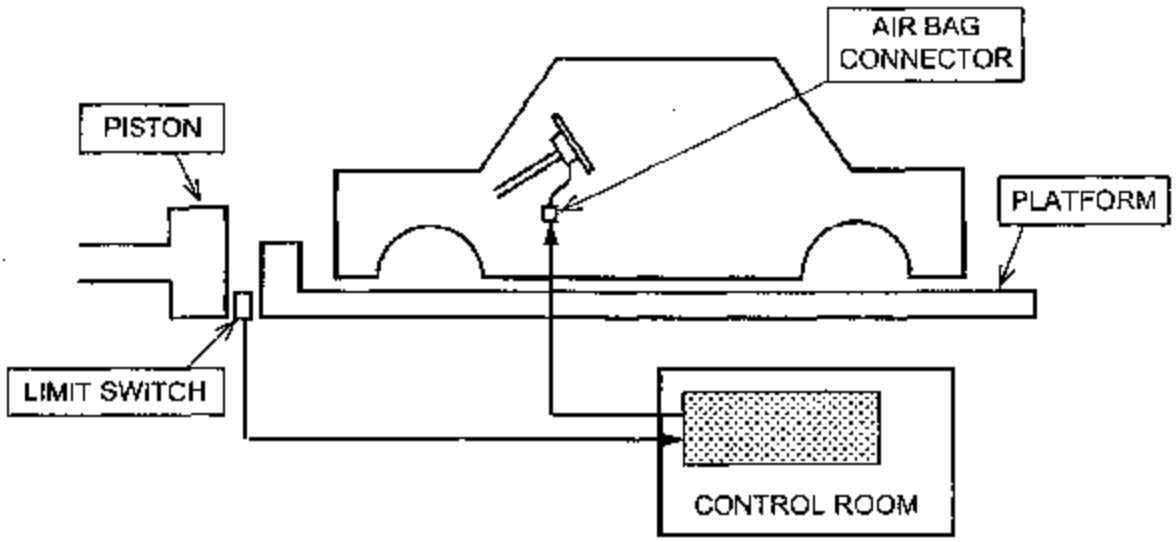

1. The timing of the initiation of the platform acceleration is measured by the limit switch that is installed between the piston and the platform.

2. Connect the limit switch, air bag and Master computer which controls the trigger time for the air bag.

3. When the platform acceleration is initiated, the limit switch send out a signal to the Master computer.

4. Master computer controls the trigger time for the air bag with the limit switch signal.

5. At 20ms from the time that 0.5G is measured on the platform, Master computer send out the trigger signal to the air bag.

OCCUANT CLEARANCE DIMENSION

	Seat inch(mm)	
	DRIVER	PASSENGER
HH	———	———
NR	17.0 (432)	———
CS	12.6 (320)	———
KDL	———	———
KDR	———	———
SH	———	———

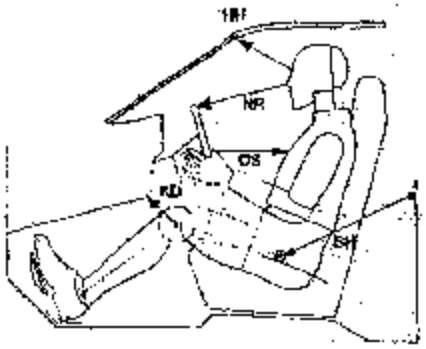

HH – Head to Header

NR – Nose to Rim

CS – Steering Wheel to Chest

KDL/KDR – Knee to Dash

SH – Striker to H-Point

	Seat inch(mm)	
	DRIVER	PASSENGER
SHY	———	———
HS	———	———

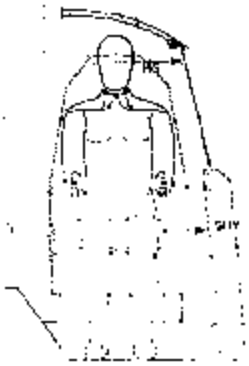

SHY – Striker to H-Point

HS – Head to Side Window

Information for NHTSA Regarding The 2002 TOYOTA AVALON

(Test Conditions for Barrier Crash Test)

The following are design-related matters necessary for conducting the barrier crash test.

Test Conditions:

1. Useable Fuel Tank Volume : 70.0l (18.5 gallons)

92% of useable volume : 64.4l (17.0 gallons)
94% of useable volume : 65.8l (17.4 gallons)

2. Vehicle Capacity Weight : 905lbs.(Fr: separate seat) , 1045lbs.(Fr: split bench seat)

Rated Cargo & Luggage Weight : 155lbs.
Designated Seating Capacity : 5(Fr: separate seat) , 6(Fr: split bench seat)

3. Tire Inflation Pressure : Fr.210kpa(30psi) Rr.210kpa(30psi) <205/65R15>
Fr.220kpa(32psi) Rr.220kpa(32psi) <205/60R16>

4. Outboard Designated Seating Position :

14.6 inch (370mm) outboard of the vertical plane that includes vehicle center

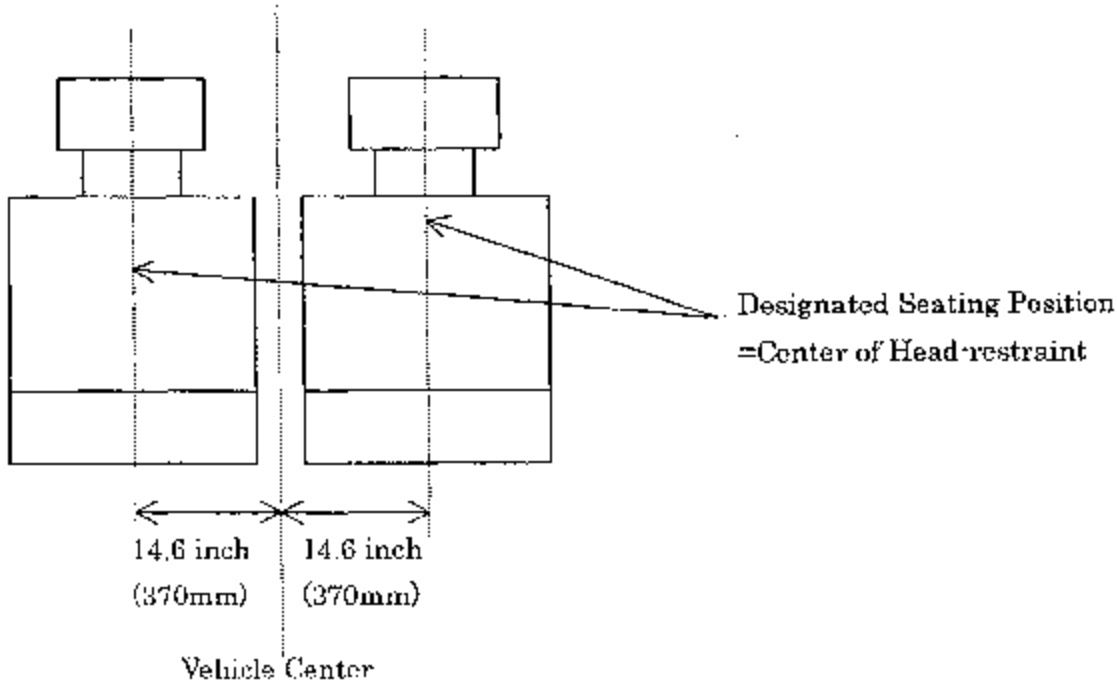

5. Front Seat Adjustment (Driver & Passenger Side) :

5.1 Manual Seat

Move to the ninth notch rearward from the foremost position.

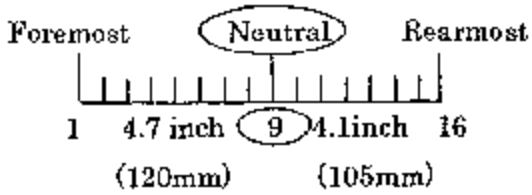

5.2 Power Seat

Move to 112.5mm(4.4inch) rearward from the foremost position.

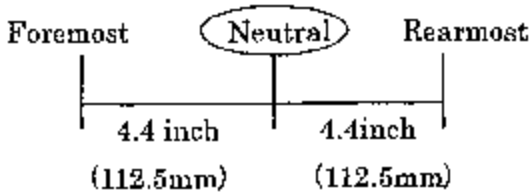

6. Designated Front Seat Back Positions(Driver & Passenger Side)

Manual Seat

Recline to the sixth notch rearward from the most upright position.
(Five (5) notch rearward from the most upright position.)

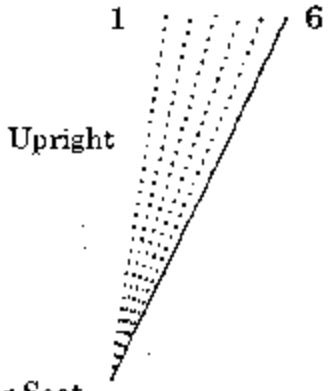

Power Seat

Recline 6.0 degrees rearward from the most upright position.

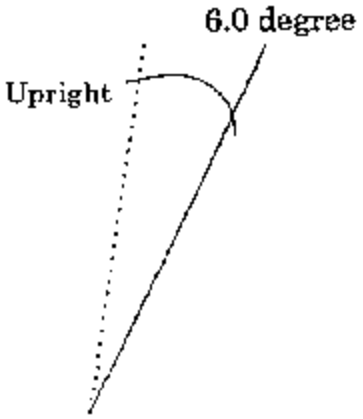

7. Steering Column Position :Tilt third notch upward from the lowermost position.

Steering column angle is 27.2 degrees to the rocker panel.

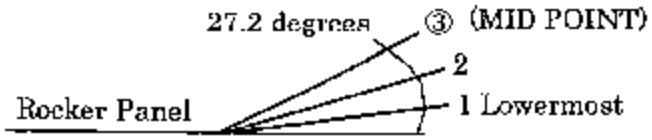

8. Shoulder Belt Anchor :

We conducted our certification tests with the adjustable shoulder belt connection locked in the second position from the upper most.

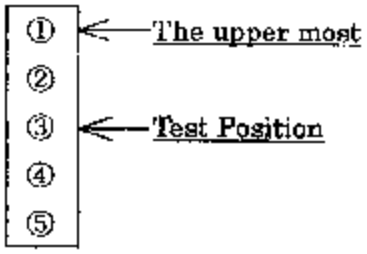

9. Anthropomorphic Test Device :

Driver : HYBRID-III

Passenger : HYBRID-III

10. Other Seat Adjustment :

Lumber Support : Rearmost

Vertical Adjuster : Lowermost

11. Dummy Clearance Dimensions :

If the dummies are properly positioned on the adjusted seating system, the dimensions are as follows:

11.1 Driver

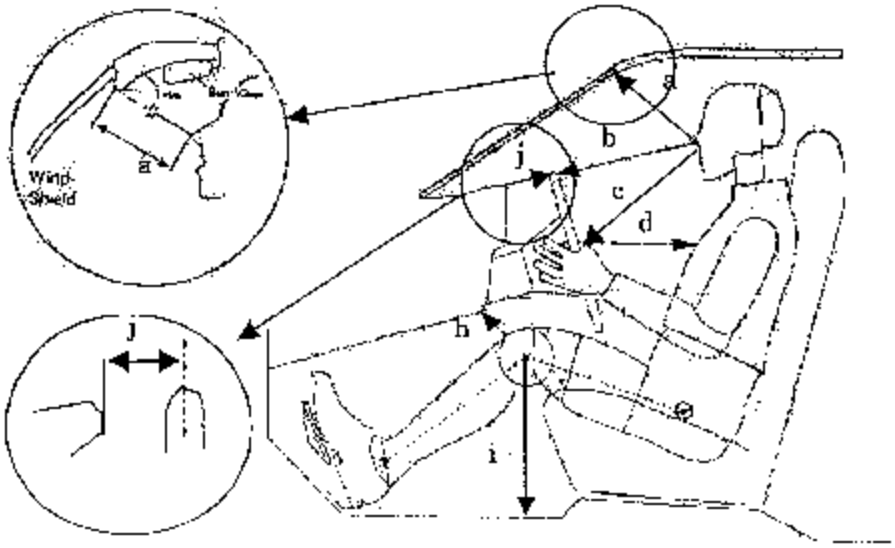

		Driver
a		14.7inch(373mm)
b		17.0inch(432mm)
c		16.3inch(415mm)
d		12.6inch(320mm)
h	R	4.7inch(120mm)
	L	5.1inch(130mm)
i	R	15.0inch(380mm)
	L	14.6inch(370mm)
j		9.8inch(248mm)

R : Right L : Left

· Interval of the Knee

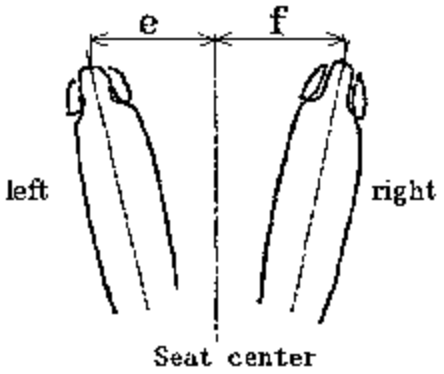

	Driver
e	5.9inch(150mm)
f	4.7inch(120mm)

· Belt Position

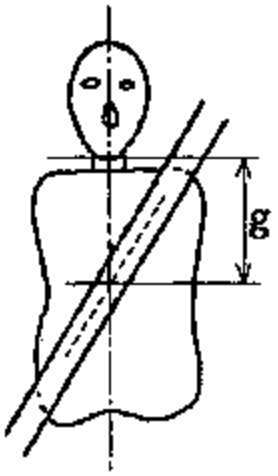

	Driver
g	5.5inch(140mm)

11.2 Passenger

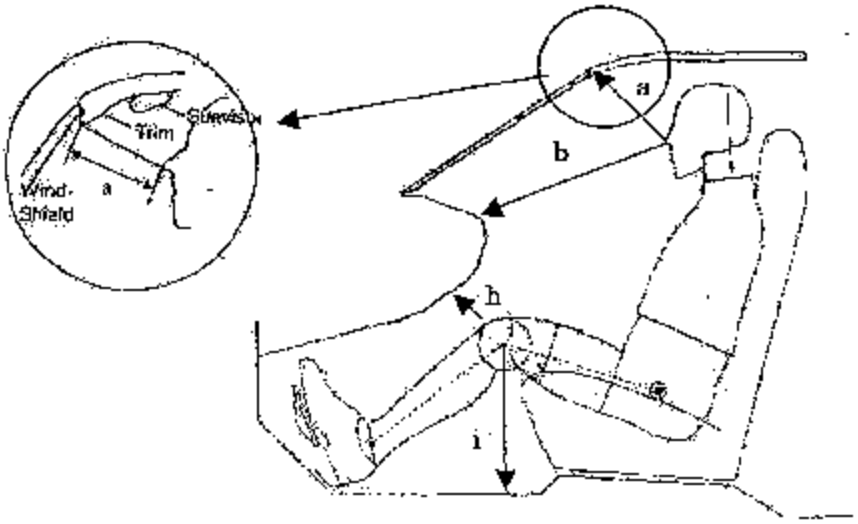

		Passenger
a		14.7inch(373mm)
b		28.3inch(720mm)
h	R	4.7inch(120mm)
	L	4.6inch(118mm)
i	R	14.2inch(360mm)
	L	14.2inch(360mm)

R : Right L : Left

・Interval of the Knee

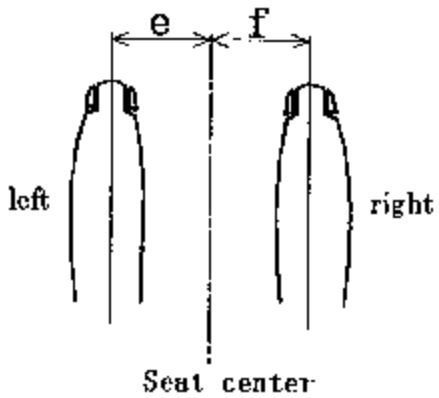

	Passenger
e	3.9inch(100mm)
f	3.9inch(100mm)

・Belt Position

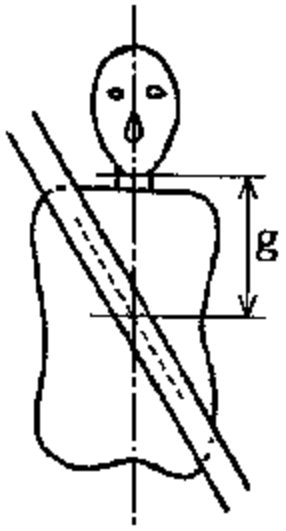

	Passenger
g	5.5inch(140mm)

12.Reconfirmation of test procedure

Please assure following procedures in order to avoid test procedure problem which may affect test result.

(1) Dummy center position

Adjust dummy center position in the following manner.

1. Scribe a line for dummy center position 14.6 inches apart from the vehicle center line in each side (right & left) as illustrated below.

2. Place dummies with its center line described in 1.

3. Scribing portions are on the windshield seat cushions, seat backs, roof, and rear window.

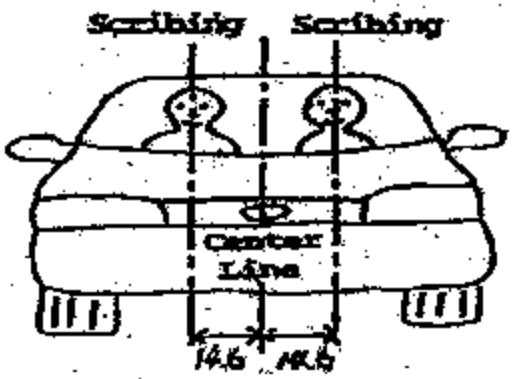

Figure 1. Center line scribing portion

(2) Dummy H-point

Adjust dummy's H-point as close as possible with the H-point obtained by using a three dimensional dummy. If differs, take record of the gap between the position of the three dimensional dummy and that of the actual set position.

(3)Hands

The palms of driver side test dummy shall be contacted with the outer part of the steering wheel rim. The thumbs shall be over the steering wheel rim and shall be lightly taped to the steering rim so that if the hand of test dummy is pushed upward by a force of not less than 2 pounds and not more than 5 pounds, the tape shall release the hand from the steering wheel rim. The tape shall be 0.5 inch width and thumb taping shall be one round.

(4) Limb joints

The dummy limb joints shall be set at 1G, barely restraining the weight of the limb when it is extended horizontally. The force required to move a limb segment shall not exceed 2Gs throughout the range of limb motion.

(5) Abdomen assy

A extremely worn abdomen assembly which had seemed to fail with the calibration requirements was used in a compliance test. If any abnormal condition can be seen on dummy, please assure that the abdomen complies with the calibration requirements.

(6) Ribs

Assure that the ribs of the dummies are not deformed. If any deformation can be seen on ribs, please exchange it to an undeformed one.

(7) Leg positioning

Please set the legs in accordance with the following manner.

1 Put driver's feet on the accelerator pedal and foot rest.

2 After the feet are positioned, adjust the knee position so that the regs stand perpendicularly.

(8) Shoulder belt

The shoulder belt shall be straightly fastened on the upper torso.

(9) Steering column target

In some NHTSA's vehicle impact tests, steering column target made from metal plate was fixed onto the steering column cover.
The metal plate fixed on the steering column cover may contact with the speed meter has a possibility of preventing normal steering column stroke.

Therefore, we propose following countermeasures:

<Proposed countermeasures>

1. Use any breakable materials like plastics as a substitution for metal plate.
2. Take sufficient distance (at least, not less than 40mm) between bracket of target and speed meter.

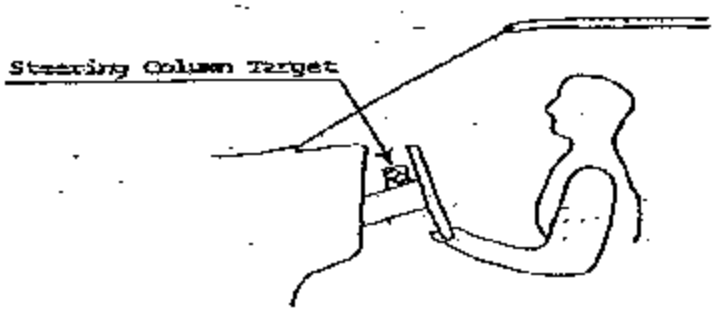

Figure 2. Steering column target

SUPPLEMENTALY EXPLANATION FOR FRONT SEAT ADJUSTMENT

1 . Manual Seat

If the seat slide is at the 9 notch rearward from the foremost position and the seat back is the 6 notch rearward from the most upright position , the relationship of the location are as follows.

a : 11.5mm (0.45 inch) ···estimated value

b : 81 degrees

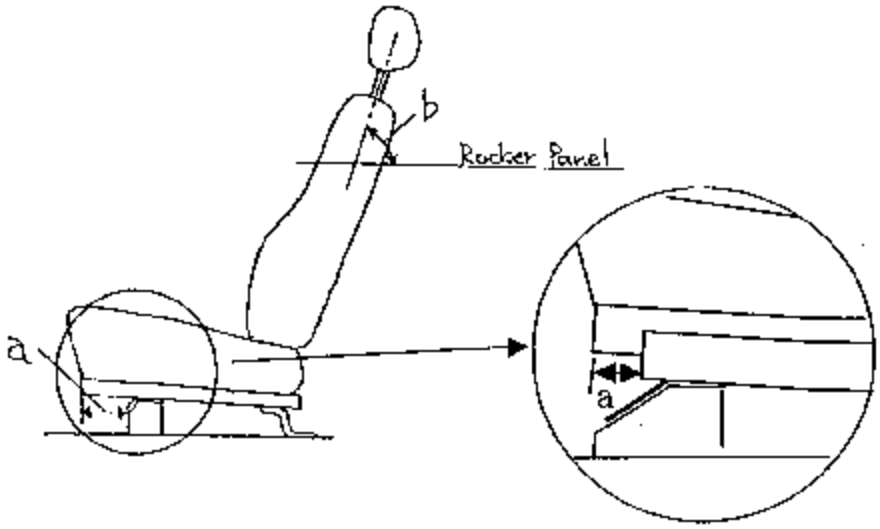

2 . Power Seat

If the seat slide is at the 9 notch rearward from the foremost position and the seat back is the 6 notch rearward from the most upright position , the relationship of the location are as follows.

a : 72.5mm (2.85 inch) ···estimated value

b : 81 degrees

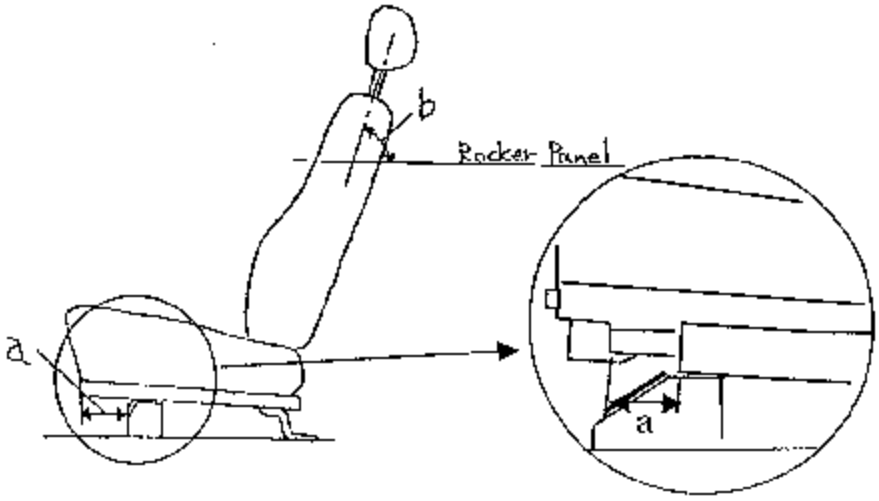

SEAT REFERENCE POINT (SRP) AND TORSO ANGLE DATA
FOR FMVSS 201, 202, 203, 207 & 210
(All dimensions in inches)

Model Year: 2002 ; Make: TOYOTA ; Model: AVALON
Body Style: 4-Door Sedan ; Seat Style: Fr :separate seat Rr :bench seat

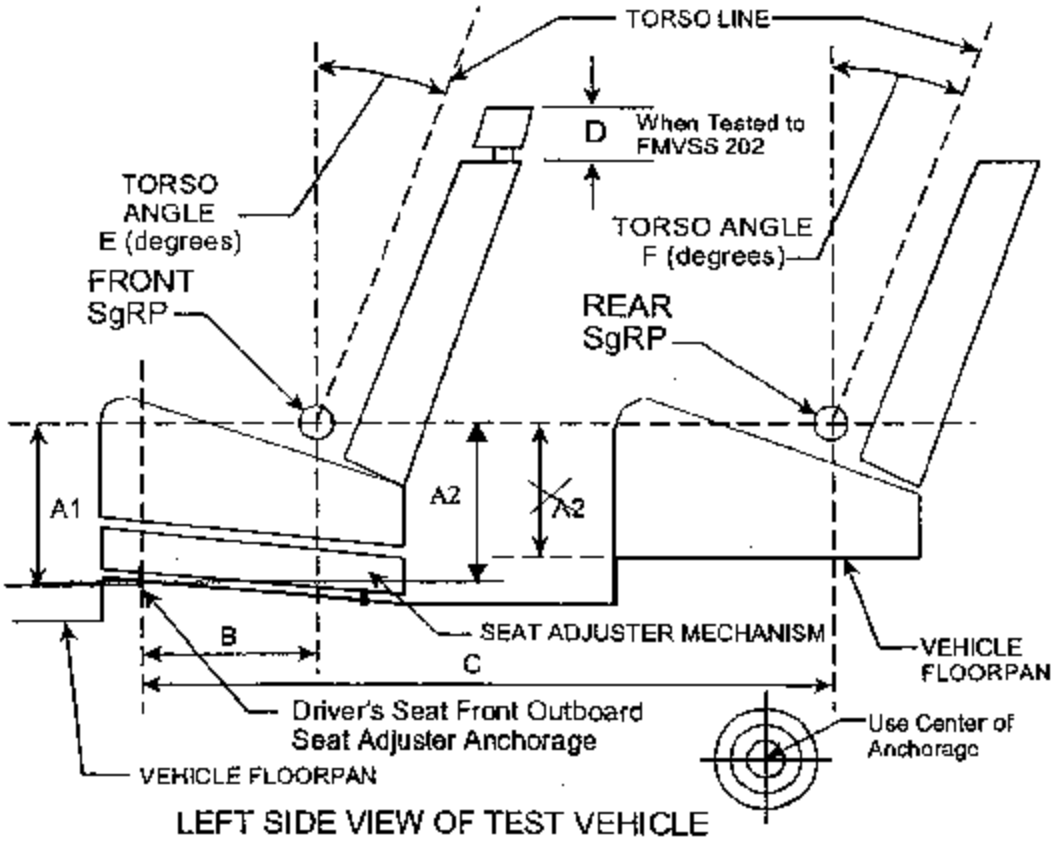

LEFT SIDE VIEW OF TEST VEHICLE

DIMENSION	FRONT, A1		REAR, A2	
	Outboard	Center	Outboard	Center
A	9.8		9.8	10.8
B	12.4			
C			48.4	47.6
D				
E	21			
F			27	23

SEATING REFERENCE POINT (SRP) AND TORSO ANGLE DATA
FOR FMVSS 201, 202, 203, 207 & 210
(All dimensions in inches)

Model Year: 2002 ; Make: TOYOTA ; Model: AVALON
Body Style: 4-Door Sedan ; Seat Style: Fr :separate seat Rr :bench seat

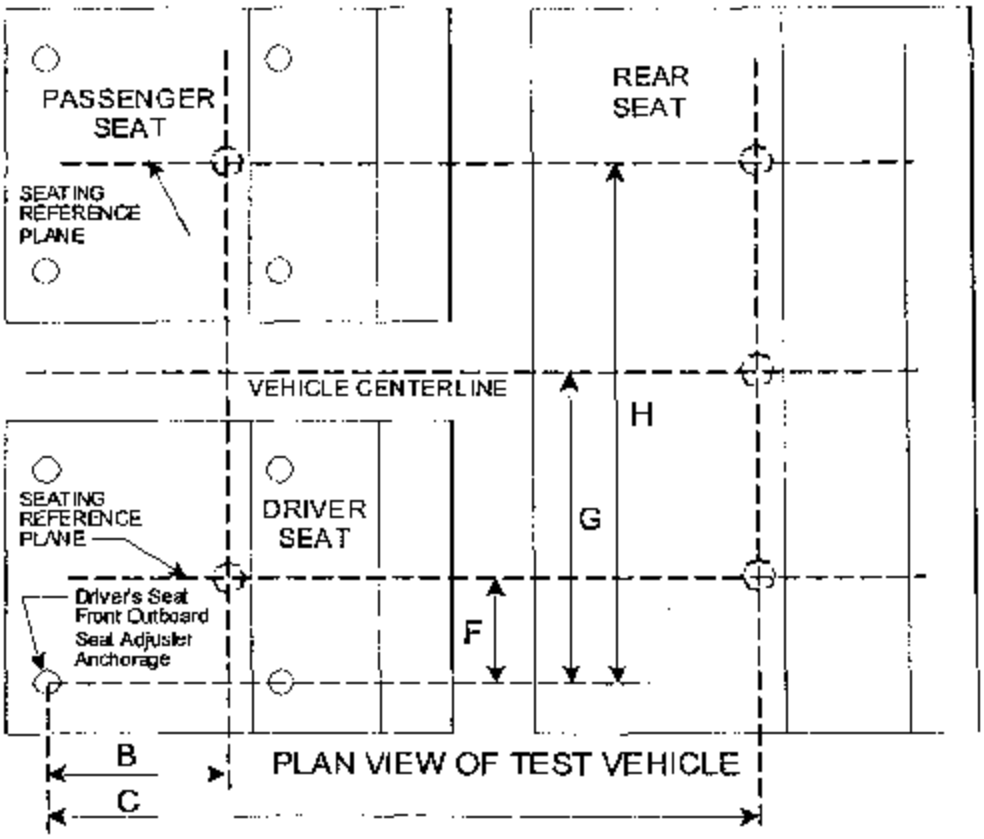

B	12.4			
C	Outboard	48.4	Center	47.6
F*	Fr	8.6	Rr	8.2
G	23.2			
H*	Fr	37.7	Rr	38.1

* Provide all dimensions needed to locate SRP.

SEAT REFERENCE POINT (SRP) AND TORSO ANGLE DATA
FOR FMVSS 201, 202, 203, 207 & 210
(All dimensions in inches)

Model Year: 2002 ; Make: TOYOTA ; Model: AVALON
Body Style: 4-Door Sedan ; Seat Style: Fr :split bench seat Rr :bench seat

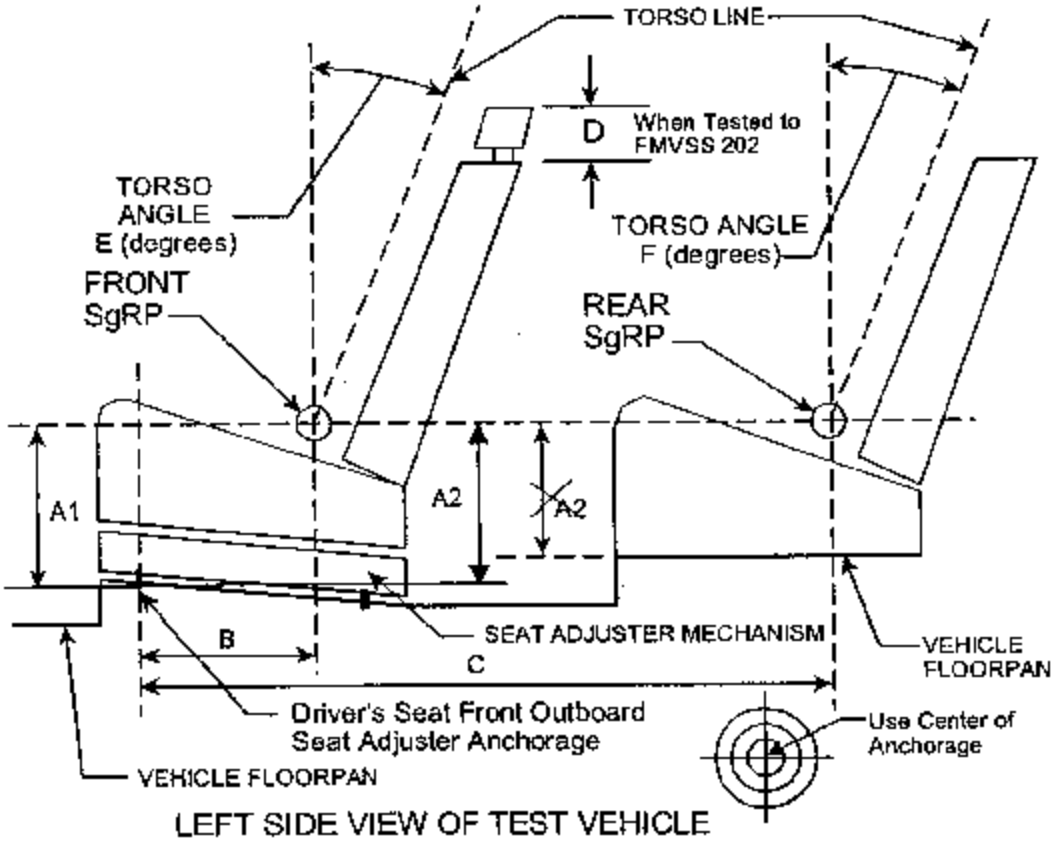

LEFT SIDE VIEW OF TEST VEHICLE

DIMENSION	FRONT, A1		REAR, A2	
	Outboard	Center	Outboard	Center
A	9.8	11.4	9.8	10.8
B	12.4	10.0		
C			48.4	47.6
D				
E	21			
F			27	23

SEATING REFERENCE POINT (SRP) AND TORSO ANGLE DATA
FOR FMVSS 201, 202, 203, 207 & 210
(All dimensions in inches)

Model Year: 2002 ; Make: TOYOTA ; Model: AVALON
Body Style: 4-Door Sedan ; Seat Style: Fr :split bench seat Rr :bench seat

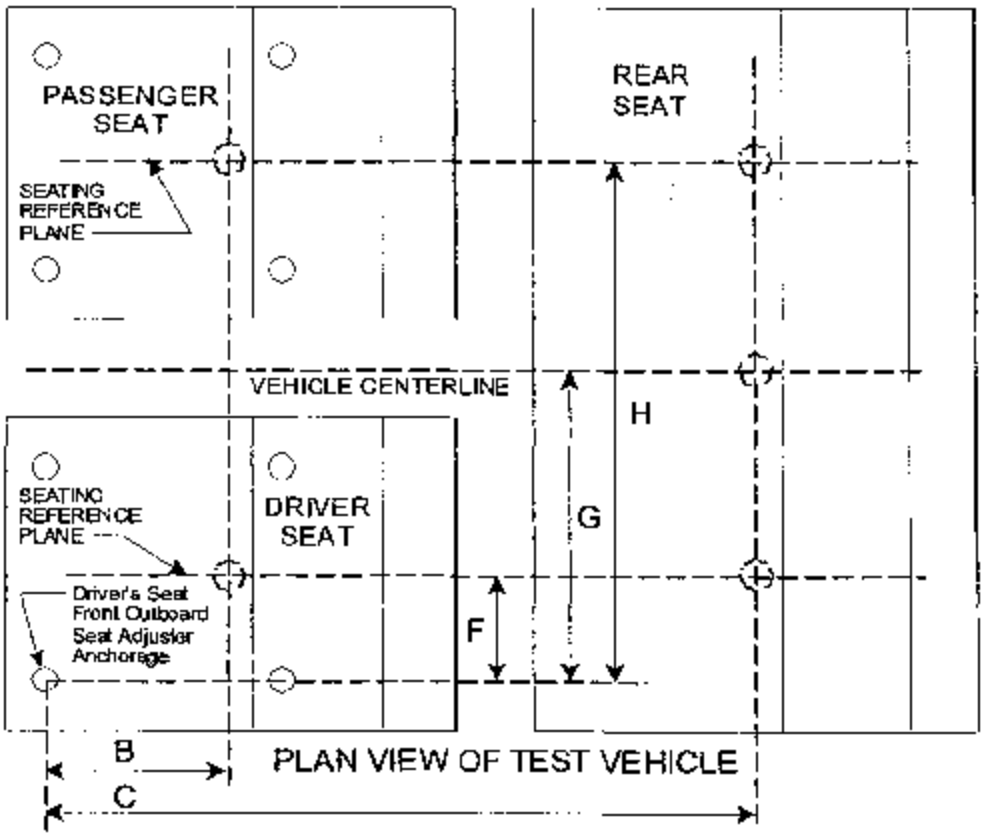

B	Outboard	12.4	Center	10.0
C	Outboard	48.4	Center	47.6
F*	Fr	8.6	Rr	8.2
G	23.2			
H*	Fr	37.7	Rr	38.1

* Provide all dimensions needed to locate SRP.

RECOMENDED REMOVAL PARTS FOR WEIGHT ADJUSTMENT

Following is the list of the vehicle components that may be removed in order to adjust the test vehicle weight.

No.	Parts Name	Estimated Weight (lbs)
1	Rear Bumper Assy.	29.7
2	Rear Combination Lamp	2.2×2
3	Outside Mirror	4.1×2
4	Inner Mirror	0.7
5	Rear Seat Back	33.1
6	Rear Seat Cushion	12.8